LAGUNA

18BX

Bandsaw

Operating Instructions



Producer:
Laguna Tools Inc
744 Refuge Way, Suite 200
Grand Prairie, Texas 75050
USA
Phone: +1 800-234-1976
Website: www.lagunatools.com

Distributor:
IGM nástroje a stroje s.r.o.
Ke Kopanině 560, 252 67, Tuchoměřice
Czech Republic, EU
Phone: +420 220 950 910
E-mail: sales@igmtools.com
Website: www.igmtools.com



2022-06-06
151-18BX LAGUNA Bandsaw Manual EN v2 A4ob

EC DECLARATION OF CONFORMITY

We
(Manufacturer) Laguna Tools Inc.
2072 Alton Parkway, Irvine, California 92606, USA

Declare that the product name: Woodworking Band Saw

Model Name : 14-twelve Bandsaw, 14bx Bandsaw, 18bx Bandsaw

Conform with the essential safety requirements of the relevant European Directive:
- Machinery Directive 2006/42/EC
- Electromagnetic Compatibility Directive 2014/30/EU

The person who compile technical file established within the EU:
Name: IGM nastroje a stroje s.r.o.
Address: Ke Kopanine 560, Tuchomerice , CZ-252 67
Tel.: +420 220 950 910
Email: sales@igmtools.com

Mounting and connecting instructions defined in catalogues and technical construction files must be respected by the user.

They are based on the following standards：
- EN ISO 12100:2010 Safety of Machinery - General principles for design / Risk Assessment and Risk reduction.
- EN 1807-1:2013 Safety of woodworking machines — Band sawing machines — Part 1: Table band saws and band re- saws
- EN 60204-1:2018/ Safety of machinery – Electrical equipment of machines, part 1: General requirements.
- EN 13849-1:2015 Safety of machinery – Safety – related parts of control systems Part 1: General principles for design
- EN 50370 -1:2005 Electromagnetic compatibility (EMC) – Product family standard for machine tools – Part 1: Emission.
- EN 50370 -2:2003 Electromagnetic compatibility (EMC) – Product family standard for machine tools – Part 2: Immunity.
- EN 61000-4-2: 2009 Electrostatic (ESD)
- EN 61000-4-4: 2012 Electrical fast transient/burst requirements (EFT/Burst)
- EN 61000-4-6: 2014 Immunity to conducted disturbances, induced by radio-frequency fields (CS)

Responsible for the documentation: Head Product Management, Laguna Tools Inc.

Name : Torben Helshoj
Responsibility : President
Authorized Signature

CE

Date : Oct. 15, 2021
Place : Laguna Tools Inc.
2072 Alton Parkway, Irvine, California 92606, USA
Telephone: +1 800 234-1976
Fax: +1 949 474-0150

EN - English
Operating Instructions (original)

Dear Woodworker,
Thank you for your purchase and welcome to the **Laguna Tools** group of discerning woodworkers. We understand that you have a choice of where to purchase your machines and appreciate the confidence you have in the Laguna Tools brand.
Every machine manufactured by Laguna Tools has been carefully designed and well thought through from a woodworker's perspective. Through hands-on experience, Laguna Tools is constantly working hard to make innovative, precision products. Products that inspire you to create works of art, are a joy to run and work on, and encourage your performance.

This bandsaw is designed to give you years of safe service. Read this owner's manual in its entirety before assembly or use.

Obsah

1. Declaration of Conformity
1.1 Warranty

2. About this Manual

3. 18BX Specifications
3.1 Parts of the Bandsaw
3.2 Specification
3.3 Noise emission

4. General safety
4.1 Safety instructions

5. Unpacking your machine
5.1 Transport and unpacking
5.2 Unpacking
5.3 What you will receive with the bandsaw
5.4 Locating your bandsaw
5.5 Locking the bandsaw

6. Assembly and set up
6.1 Assembling the rubber feet
6.2 Assembling the optional mobility kit
6.3 Fitting the table
6.4 Fitting the table rule
6.5 Fitting the fence
6.6 Fitting the table insert and Fence Stopper
6.7 Fitting the optional light
6.8 Connecting the bandsaw to the electricity supply

7. Testing the bandsaw
7.1 Before starting the bandsaw
7.2 Fitting a blade to the bandsaw
7.3 Tracking the blade
7.4 Tensioning the blade
7.5 Adjusting the blade guards
7.6 Adjusting the blade guides

8. Using the bandsaw
8.1 Adjusting the fence
8.2 Selecting the Right Blade
8.3 How to coil a bandsaw blade

9. Maintenance

10. Troubleshooting

---

1. Declaration of Conformity
We declare that this product is in compliance with the directive and the standard mentioned on the previous page of this manual.

1.1 Warranty
IGM Tools & Machinery strives to always deliver high-quality machinery. The warranty is governed by the valid terms and conditions of IGM Tools & Machinery available at www.igmtools.com.

2. About this Manual
This manual is intended to thoroughly cover the setup up, maintenance, and proper adjustments of your new purchase. Aside from the proceeding general safety considerations, this manual **DOES NOT** cover woodworking or metalworking techniques that are possible with this product and the appropriate safety precautions necessary for safe practices. There are several organizations with published safe practices, techniques, and proper operation of this tool. Or look for handy tips and instructions at www.igmtools.com.

3. 18BX Specifications
The bandsaw is generally defined as a saw blade in the form of an endless steel band that rotates around two or more wheels. This blade is a continuous metal band with teeth on one side. As the wheels rotate, so does the band, which creates the continuous sawing action.

3.1 Parts of the Bandsaw
1. Tension indicator window
2. Switch
3. Motor
4. Frame
5. Blade tension handle
6. Blade tracking window
7. Cast iron table
8. Blade guide adjustment hand wheel
9. Blade guide
10. Rip fence assembly
11. Dust port 100mm
12. Quick-release blade tension lever
13. Blade tracking knob
14. Optional mobility kit
15. 400V power socket
16. Blade guide shaft lock knob
17. Flywheel
18. Brake foot pedal

Note: Mobile stand and lighting are optional accessories

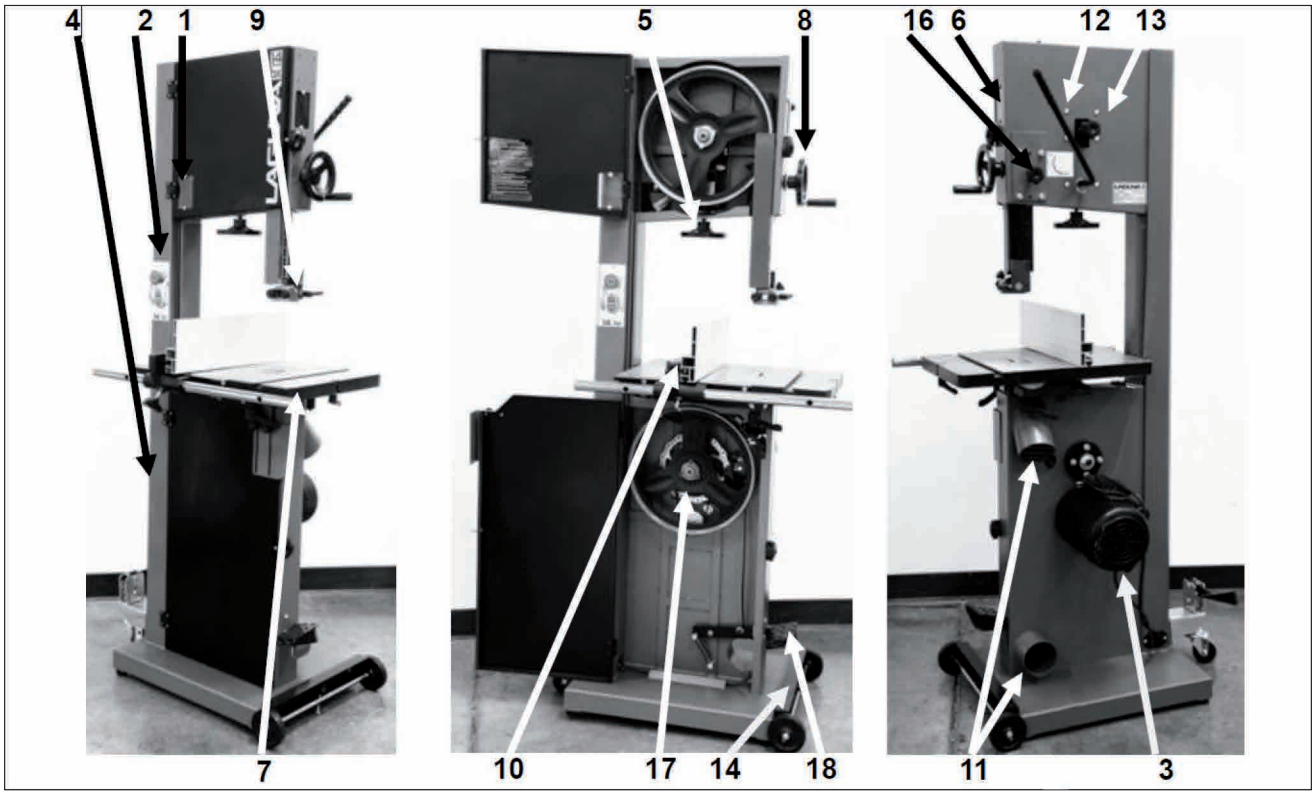

The bandsaw does not have many parts. The major parts are discussed in this manual. If you are not familiar with the bandsaw, take the time to read this section and become familiar with the machine.

1. Tension indicator/window
Tension indicators are designed to indicate the compression of a spring. As a rule, the greater the spring compression, the greater the tension on the blade. The tension scale does not register until the blade is relatively taut and is located on the inside of the body of the bandsaw. The tension scale is a general reference and not a rule. It is visible with the upper door closed by looking through the tension indicator window.

2. Switch
To start the machine press the “I” button on the start stop switch. To shut off the machine press the “O” on the start stop switch. When the safety switch is pressed it stops the power to the motor. To reset it, twist and it will pop out and allow power to be supplied to the motor.



.

3. Motor
The bandsaw is supplied with a 2,2kW, 400V motor. It drives the lower flywheel through a drive belt.

4. Frame
The frame of the bandsaw is a U-shaped frame, which houses all the parts of the machine. This is the heart of the bandsaw and has to be very rigid, as it takes the strain of the blade being tensioned.

5. Blade tension handle
The blade tension handle moves the blade tension and tilt assembly vertically. The vertical action compresses a spring that ensures that the blade tension is constant and will not change dramatically as the blade length increases due to the heat generated by the cutting action.

6. Blade tracking window
There is a blade tracking window on the side of the frame that allows the edge of the upper flywheel to be viewed. This allows the tracking of the blade to be achieved with the door closed.

7. Cast iron table
The table supports the work piece and can tilt (-6 degrees to +45 degrees) to produce cuts at various angles. It has a groove to the right-hand side of the blade, which is used to guide the miter gauge. In the center there is a table insert which the blade passes through. Should the blade wander off center, this table insert will protect the blade from damage, as it is soft and should not damage the blade. The table also supports the adjustable fence, which is used for parallel cuts. There is a nut and bolt that joins both sides of the table and stops the table from warping. The nut and bolt must always be fitted in the table and only removed when removing or fitting a blade.

8. Blade guide adjustment hand wheel
The upper blade guides are attached to the blade guide shaft. The shaft is vertically adjustable with a hand wheel. The guides should be adjusted so the guides are just above the wood being cut. This gives the blade maximum stability and is also the safest way to operate the bandsaw.

9. Blade guides
There are two sets of blade guides, one above and one below the table. The function of the guides is to give the blade stability and ensure that the blade movement left/right, forward/back is kept to a minimum. The guides above the table are fitted to a shaft that has vertical adjustment. The upper guides are adjustable so that the guides are held just above the job being cut. This gives the blade the maximum amount of stability and also keeps the amount of blade that is exposed to a minimum. The guides have ceramic inserts that can be adjusted for almost zero clearance.

10. Rip fence assembly
The rip fence assembly consists of a guide rail, cast knuckle, fence attachment casting, rule and a high-low fence. The guide rail is attached to the table side. It guides the fence assembly across the table. The cast knuckle slides on the guide rail and is lockable in any position to suit the width of cut. The fence attachment casting is attached to the cast knuckle with three screws that when loosened allow the fence to be adjusted for drift. The fence is attached to the fence attachment casting with two studded knobs that allow the fence to be adjusted laterally across the table to suit the job being cut. The fence can be fitted in the low position or the vertical (7 1/4“ height) position.

There is a rule that is fitted to the side of the table and can be used as a quick guide on the distance that th

The Fence Stop can be used for non through cuts and can be set on any length of the fence with the quick release handle.”e fence is from the blade.

Note. The rule will have to be adjusted each time the fence is adjusted for drift, as this will change the distance the fence is from the blade.

11. Dust ports 100 mm
The bandsaw produces a lot of sawdust, so extraction is very important. This is achieved by connecting a 100mm dust extraction hoses with a minimum capacity of 1699 m^3/h to the two dust ports located at the back of the machine. The stronger the suction from the dust collector, the better for you and the machine.

12. Quick-release blade tension lever
There is a quick-release tension lever at the back of the bandsaw. The lever is a convenient way of quickly releasing the tension on the blade and speeds up blade change dramatically.

13. Blade-tracking knob
The blade-tracking knob is located at the back of the bandsaw and is used to adjust the blade tracking. The knob must be locked once the adjustment is completed.

14. Optional mobility kit
The optional mobility kit is fitted to the base of the bandsaw and consists of two fixed wheels at the front of the bandsaw and a swivel wheel at the back of the band saw. The swivel wheel is activated and deactivated with a foot lever. With the swivel wheel deactivated, the bandsaw sits on two rubber feet.

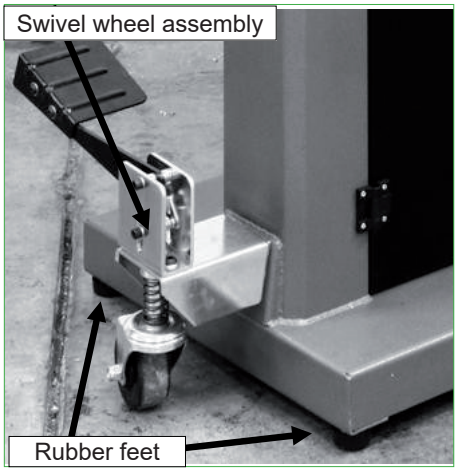

15. Optional light
The optional light is fitted with four screws through pre-drilled holes at the top of the bandsaw. The bandsaw is provided with a 220V socket that the light can be connected to.

16. Blade guide shaft lock
The upper blade guide is fixed to the blade guide shaft, which is vertically adjustable. Once the guides have been adjusted vertically, the shaft is locked in position with the lock knob.

17. Flywheel
The blade is suspended over two wheels that are covered with rubber called a „tire“. The tire cushions the blade and protects the teeth from coming in contact with the metal of the flywheel. The lower wheel is the drive wheel and is attached to the motor with a rubber drive belt. The lower flywheel powers the blade and pulls the blade down through the work piece. The top wheel has two functions. One function is to balance or track the blade on the wheels, and the second one is to tension the blade. Both functions are adjustable.

18. Brake
The bandsaw is provided with a brake that is operated by applying the foot pedal. When the foot pedal is applied, the power is removed from the motor and the flywheel is slowed by the disc break.



19. Guards
When running, the blade can be very dangerous, and the amount of blade that is exposed must be kept to a minimum. The machine is supplied with a number of guards, all of which **MUST** be installed and used while the machine is running. There is a guard that is attached to the lower door and is adjustable vertically once the door is closed. There is a guard on the guide vertical adjustment shaft.

20. Blade tilt and tension mechanism
The upper wheel is attached to the tilt and tension mechanism. This mechanism adjusts the wheel so that the bandsaw blade can be adjusted for blade tracking. This is achieved by a screwed handle at the back of the machine that pushes on the mechanism and adjusts the axis of the wheel so that it runs true with the lower wheel. The second function is to tension the blade, which is achieved by adjusting the upper flywheel vertically. A handle is located below upper flywheel and, when rotated, will move the wheel up or down. The machine has a quick-acting blade release mechanism that is located at the back of the machine and will remove the tension from the blade to speed the removal and fitting of blades. The mechanism has a spring, which helps to keep the tension constant as the blade expands and contracts with the heat generated by the cutting action.

21. Electrical connection
The bandsaw is provided with a cable.

22. Identification
There is a plate at the back of the machine listing all the manufacturing data.



3.2 Specification

Motor voltage	400V, 2,2 kW, 50Hz, 3 Ph
Breaker	3 x 16 A, tripping characteristic C (16/3/C)
Throat	463 mm
Table cast iron	508 mm x 660 mm
Table tilt	- 6° + 45°
Mitre slot	9,5 mm x 19 mm
Table height	965 mm
Fly wheel	Cast iron
Resaw capacity	406 mm
Minimum blade length	3651 mm
Maximum blade length	31,75 mm
Minimum blade width	3 mm
Guides	Ceramic
Height	1 975 mm
Machine dimensions (W x D)	919 x 759 mm
Base footprint	688 x 500 mm
Machine dimensions with mobility kit (W x D)	1093 x 797 mm
Base footprint with mobility kit	949 x 618 mm
Weight gross	200 kg
Weight net	186 kg
Package size W x D x H	2070 x 860 x 615 mm
Mobility kit	Optional
Industrial work-light	Optional
Fence Face Dimensions	18,5 x 57,5 cm

3.3 Noise emission
Equivalent A-weighted Sound pressure level according to EN ISO 3746: 73.56 dB(A)
Uncertainty, K in decibels: 4.0 dB (A) according to EN ISO 4871 The figure quoted is emission levels and are not necessarily safe working levels. Whilst there is a correlation between the emission and exposure levels, this cannot be used reliably to determine whether or not further precautions are required. Factors that influence the actual level of exposure of the workforce include characteristics of the work room, the other sources of noise, etc. Like the number of machines and other adjacent processes.

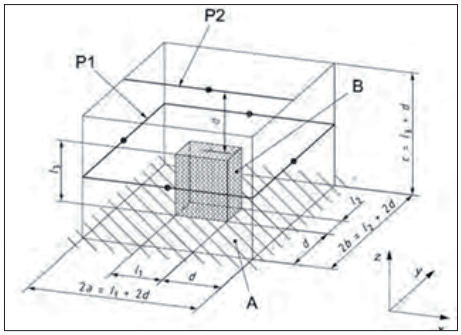

4. General safety
Warning: Read all safety considerations. Failure to follow this set of guidelines can result in unwarranted damage to the machine and serious injury to the operator and bystanders. Save all warnings and instructions for future reference.

4.1 Safety instructions

• Keep guards in place and in working order.
• Remove adjusting keys and wrenches. Form habit of checking to see that keys and adjusting wrenches are removed from tool before turning it on.
• Keep work area clean. Cluttered areas and benches invite accidents.
• Don't use in dangerous environment. Don't use power tools in damp or wet locations, or expose them to rain. Keep work area well lighted.
• Keep children away. Ali visitors should be kept safe distance from work area.
• Make workshop kid proof with padlocks, master switches or by removing starter keys.
• Don't force tool. It will do the job better and safer at the rate for which it was designed.
• Use right tool. Don 't farce tool or attachment to do a job for which it was not designed.
• Use proper extension cord. Make sure your extension cord is in good condition. When using an extension cord, be sure to use one heavy enough to carry the current your product will draw. An undersized cord will cause a drop in line voltage, resulting in loss of power and overheating. Table a shows the correct size to use depending on cord length and nameplate ampere rating. If in doubt, use the next heavier gage. The smaller the gage number, the heavier the cord.
• Wear proper apparel. Do not wear loose clothing, gloves, neckties, rings, bracelets or other jewelry that may get caught in moving parts. Nonslip footwear is recommended. Wear protective hair covering to contain long hair.
• Always use safety glasses. Also use face or dust mask if cutting operation is dusty. Everyday eyeglasses only have impact-resistant lenses; they are not safety glasses.
• Secure work. Use clamps or a vise to hold work when practical. Lt's safer than using your hand, and it frees both hands to operate tool.
• Don't overreach. Keep proper footing and balance at all times.
• Maintain tools with care. Keep tools sharp and clean for best and safest performance. Follow instructions for lubricating and changing accessories.
• Disconnect tools before servicing, when changing accessories such as blades, bits and cutters.
• Reduce the risk of unintentional starting. Make sure switch is in off position before plugging in.
• Use recommended accessories. Consult the owner's manual for recommended accessories. The use of improper accessories may cause risk of injury to persons.
• Never stand on tool serious injury could occur if the tool is tipped or if the cutting tool is unintentionally contacted.
• Check damaged parts. Before further use of the tool, a guard or other part that is damaged should be carefully checked to determine that it will operate properly and perform its intended function - check for alignment of moving parts, binding of moving parts, breakage of parts, mounting and any other conditions that may affect its operation. A guard or other part that is damaged should be properly repaired or replaced.
• Direction of feed. Feed work into a blade or cutter against the direction of rotation of the blade or cutter only.
• Never leave tool running unattended turn power off. Don't leave tool until it comes to a complete stop.

Location of warning signs

Because the direction of the blade is always downward toward the table, there is little danger (except for special cuts) that the wood will be thrown back at the operator, which is called a kickback. There is always danger of kickback when a circular saw is being used. For safety reasons many woodworkers prefer the bandsaw especially when cutting small pieces. The unique feature of the bandsaw is that the work piece can be rotated around the blade creating a curve. It is the tool most often used when curves have to be cut in wood. Because the bandsaw blade is fairly thin, it can cut thick stock with a minimum of horsepower. For this reason the bandsaw is often used when valuable pieces of wood are made into a thin piece of veneer.

5. Unpacking your machine

5.1 Transport and unpacking
It is probable that your machine will be delivered by a third party. Before you unpack your new machine, you will need to first inspect the packing, invoice and shipping documents supplied by the driver.
Ensure that there is no visible damage to the packing or the machine. You need to do this prior to the driver leaving. All damage must be noted on the delivery documents and signed by you and the delivery driver. You must then contact the seller within 24 hours.

5.2 Unpacking

To unpack your machine, you will need tin snips, knife and a wrench.

Note: The machine is heavy, and if you have any doubt about the described procedure, seek professional assistance. Do not attempt any procedure that you feel is unsafe or that you do not have the physical capability of achieving.

Using the tin snips, cut the banding that is securing the machine to the pallet (if fitted).
WARNING: EXTREME CAUTION MUST BE USED BECAUSE THE BANDING WILL SPRING AND COULD CAUSE INJURY.

Your bandsaw will be shipped in custom packaging consisting of a heavy-duty cardboard box and Styrofoam internal packaging.
1. Open the cardboard box and remove the loose parts and top Styrofoam.
2. Lift the bandsaw out of the packaging. You will need two or more people, as the bandsaw is heavy.
3. Lift the bottom Styrofoam out and remove the parts that are packaged under the bandsaw and packaging.

Location of warning signs

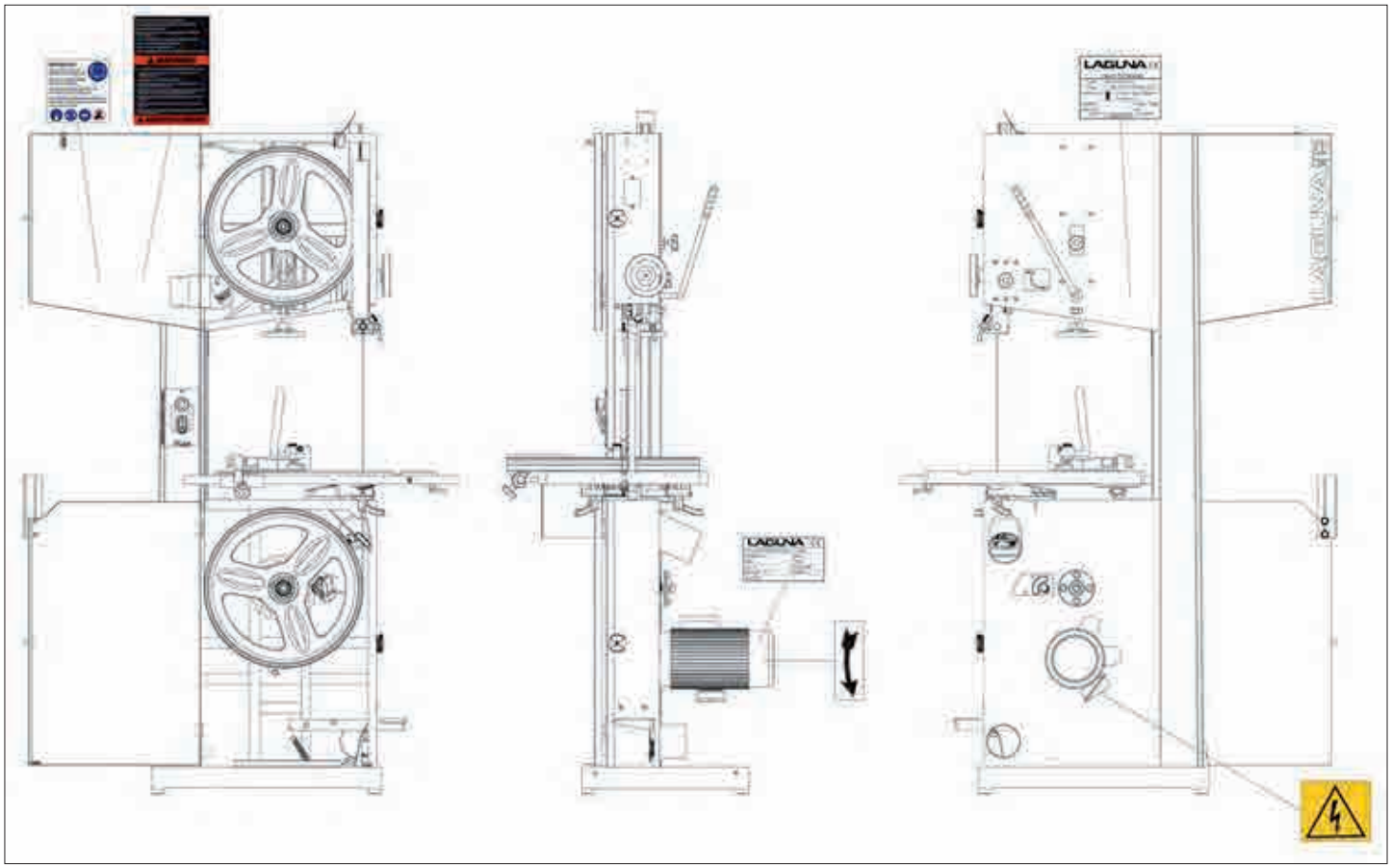

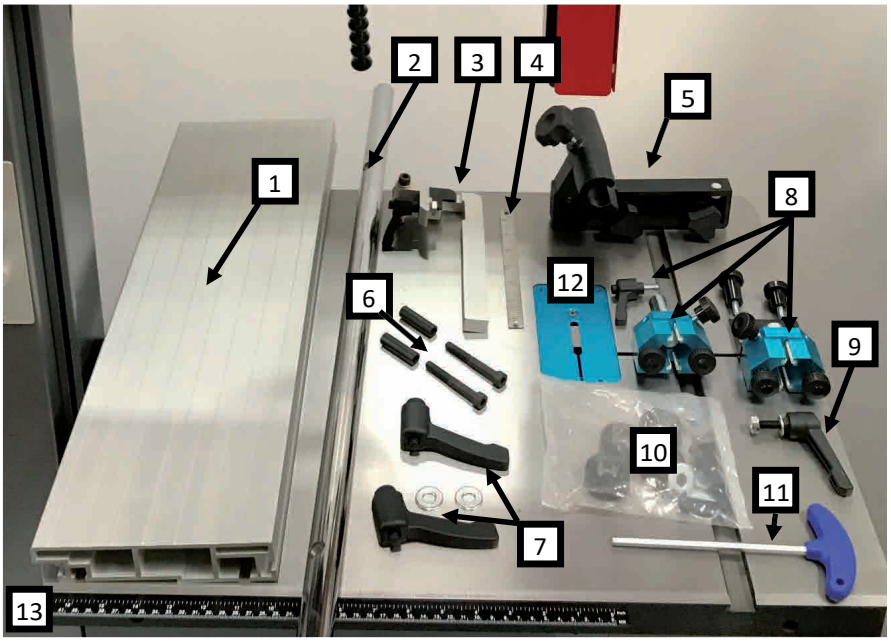

Pic. 8a, 8b
1. Fence
2. Fence Bar
3. Fence Stop
4. Fence Stop Rule
5. Fence mount
6. Fence Mount Hardware
7. Table Tilt Locks
8. Ceramic guides and locks
9. Bladeinsert lock
10. Caster kit
11. 5mm hex key
12. Throat plate
13. Fence rule

5.3 What you will receive with the bandsaw

• Ruler and table assembly aids (Pictures 8a, 8b).

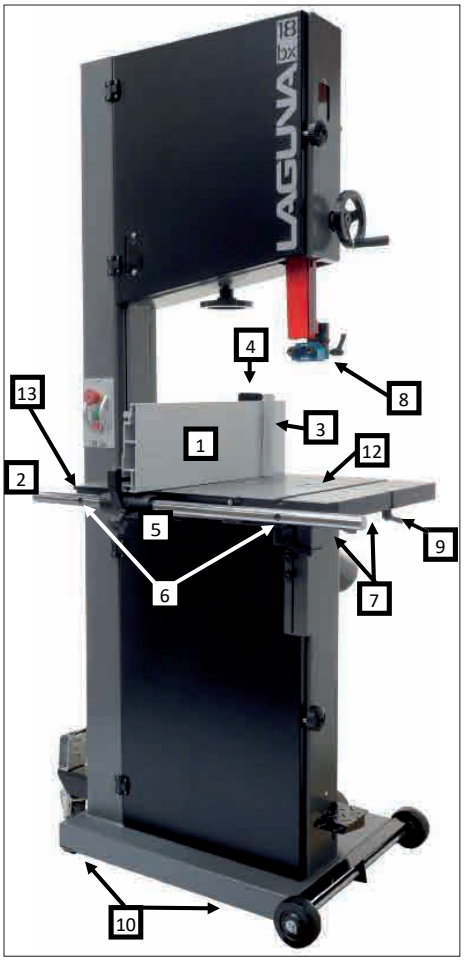

5.4 Locating your bandsaw

Before you remove your bandsaw from the pallet, select the area where you will use your machine. There are no hard-and-fast rules for its location, but below are a few guidelines.
1. There should be an area at the front and back of the machine suitable for the length of wood that you will be cutting. If you intend to use your saw for scrollwork, this may not be important but should be considered at this stage.
2. Adequate lighting. The better the lighting, the more accurate and safely you will be able to work
3. Solid floor. You should select a solid, flat floor, preferably concrete or something similar.
4. Close to power source and dust collection.

5.5 Locking the bandsaw

It is strongly recommended that the bandsaw is never be left unattended in the unlocked condition.
To lock the machine it is recommended that a cover (not supplied) is made to lock the control panel. We have supplied two concepts for locking the panel (see below). The cover can be made from wood or plastic.
First, push down the emergency stop. Then lock the cover together by putting padlocks [not included] on the two handles on the control panel. To safeguard your machine from unauthorized operation and accidental starting by young children, the use of padlocks is strongly recommended

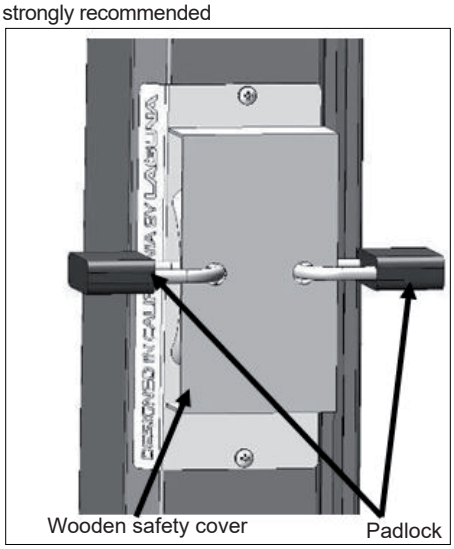

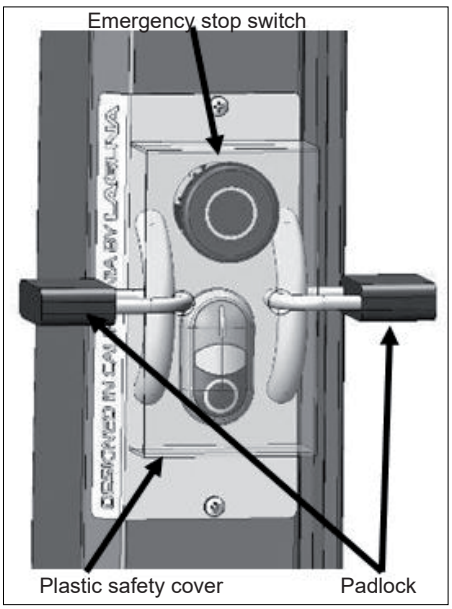

6. Assembly and set up

6.1 Assembling the rubber feet

Method 1.
Fit the rubber feet to the bandsaw prior to removing it from the packaging.

Method 2.
1. Support the bandsaw on wooden blocks.
2. Assemble the rubber feet with the fixings provide both at front and back of the bandsaw.

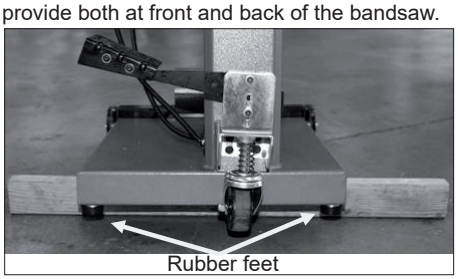

6.2 Assembling the optional mobility kit



1. Support the bandsaw on wooden blocks.
2. Fit the swivel assembly to the back of the bandsaw with the provided bolts.
3. Fit the front wheels to the front of the bandsaw with the bolts provided and remove the two rubber feet that are close to the front wheels.

Note. Never operate the bandsaw with the mobility kit engaged or the front wheel assembly locking screw not engaged.

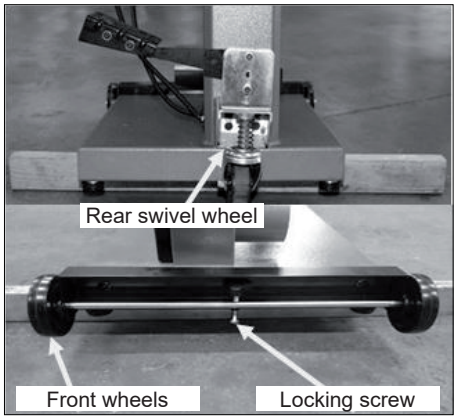

6.3 Fitting the table

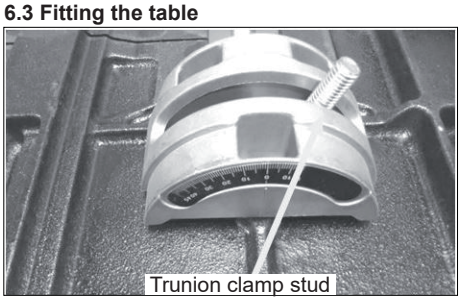

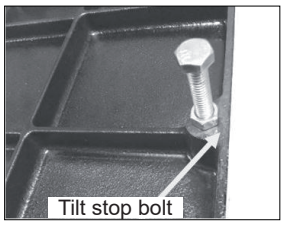

It is possible to fit the table to the bandsaw with one person but far easier if you have two people, one to lift the table and one to guide the trunion clamp studs.

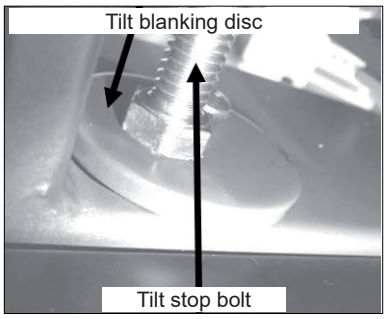

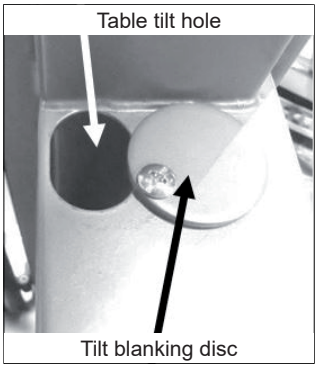

The table has a reference stop bolt that is used to quickly align the table after tilting. The stop bolt hits the tilt-blanking disc when it is positioned over the table tilt hole. When the tilt blanking disc is moved away from the hole, it allows the tilt stop bolt to pass through the table tilt hole, and the table can be moved to the maximum amount of tilt (-7 degrees).

Table mounted to the bandsaw

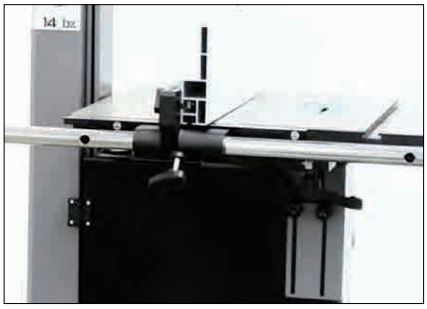

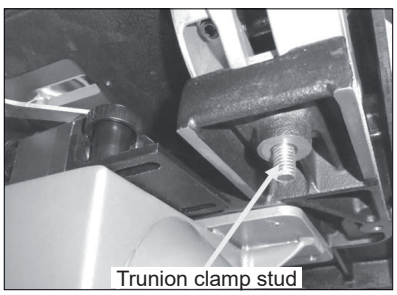

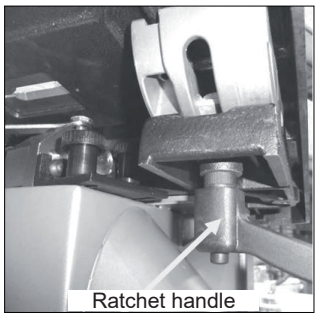

With the table fitted to the trunions, assemble the two ratchet handles and flat washers.
How to adjust the table for square to the blade. This will be detailed later in the manual.

6.4 Fitting the table rule

Table rule with fixings

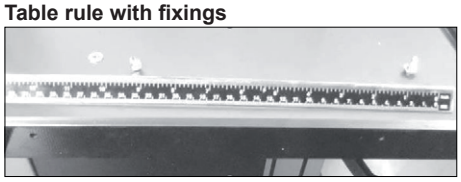

Table with rule mounted

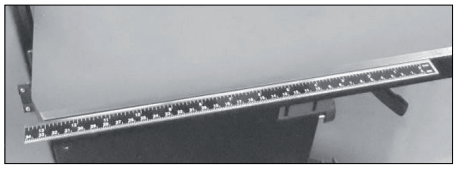

Attach the rule to the table with the fixings supplied. Do not fully tighten the bolts, as the position of the rule will have to be adjusted to suit the blade, which will be detailed later in the manual.

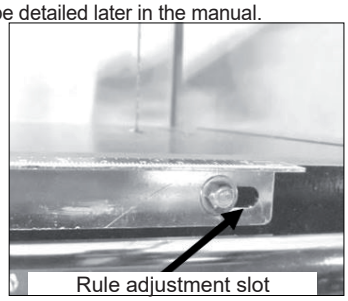

6.5 Fitting the fence

1. Fit the fence bar to the table with the screws and spacers supplied.
Note. The distance between the fixing holes and the end of the bar is not symmetrical, and the end that has the longest distance must be at the back of the bandsaw (closest to the column).
2. Slide the fence support onto the fence bar and fit the fence support clamp screw.
3. Slide the fence onto the clamping strip.
4. Lift the fence just clear of the table and secure it in position with the clamping screws.

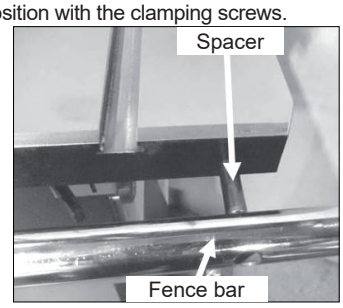

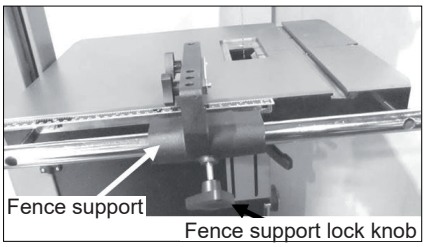

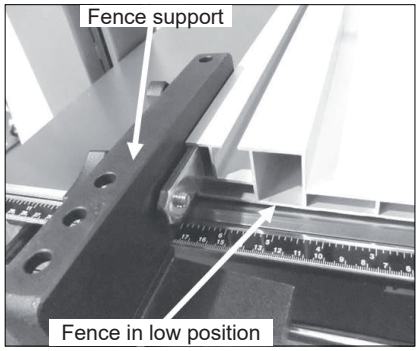

Fence clamped in low position

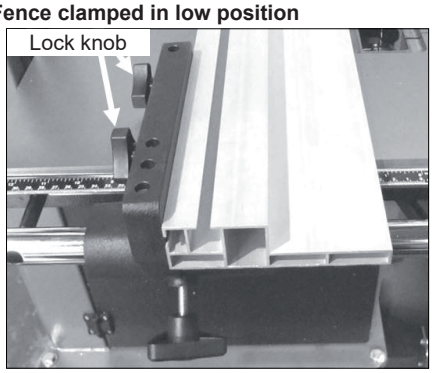

Fence in high position

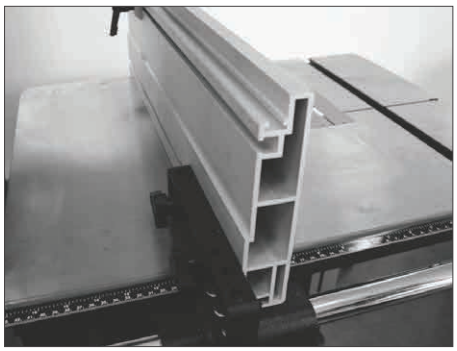

The fence support and the fence are held off the table with a nylon-support Allen screw. This screw ensures that the fence and the fence support do not damage the table. The screw is adjustable to compensate for wear.
Note. The fence clamp screw is shown removed.

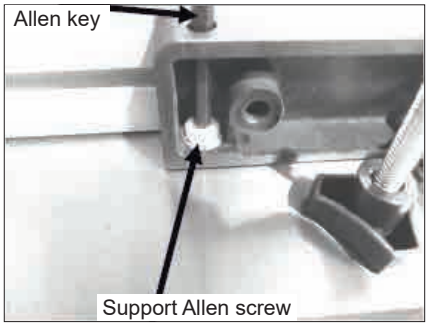

6.6 Fitting the table insert and Fence Stopper
The machine is supplied with a removable table insert that is held in position with a screw. The table insert is removed when blades are removed or fitted to the machine. The insert is made of soft aluminium so that if the blade wanders and contacts the insert, there is less chance of damaging the blade. Adjusting screws are provided to adjust the insert vertically level with the table. The insert comes factory set, but should adjustment become necessary, place the insert in the table with the screw fitted. Place a straight edge across the table and insert and adjust the screws so that the table insert is level with the top of the table.

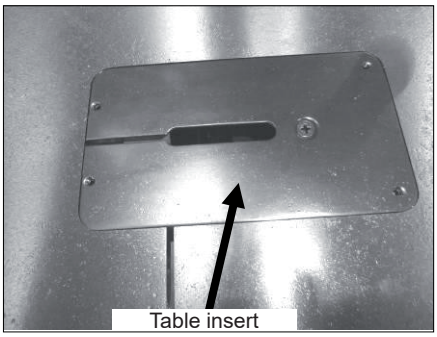

Fitting the Fence Stop
The fence stopper can be used to control the length of cut for non through cuts. To set the stop in place, the scale should be attached into the T-slot on top of the fence when it is on the vertical position. The “0” on the scale should be adjusted and set to be align up to the front tip of the blade. Then refer to the scale, slide the fence stopper to the desired cutting length behind the front tip of the blade as shown in the scale, then fix the fence stopper in place by tightening down the quick release handle.



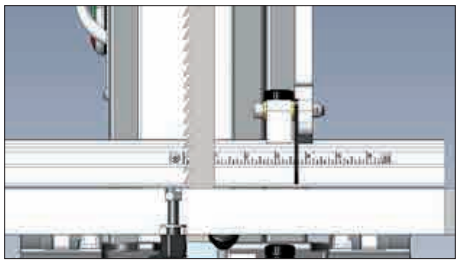

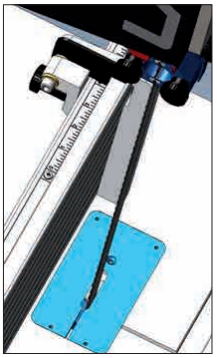

6.7 Fitting the optional light

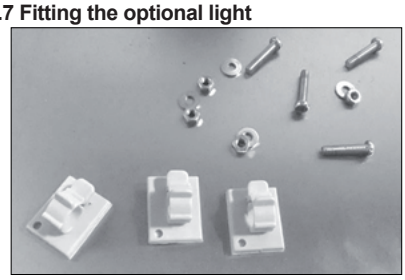

Fixing screws and cable clips

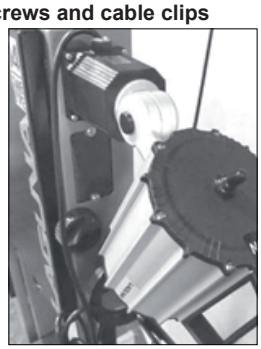

The light is fitted to the top of the bandsaw as shown. The light is supplied with a plug. The cable must be held in position with the clips provided and positioned so that the cable is safe and will not in any way come close to the blade or cabinet door.
Above is the suggested cable route. Use the sticky cable clamps to secure the cable along the top of the bandsaw. Ensure that the cable is not over the vertical shaft hole, as it could be damaged when the shaft exits the hole.

6.8 Connecting the bandsaw to the electricity supply
The bandsaw is supplied pre-wired with a 400V / 16 Amp plug. To protect the electrical circuit, it is recommended that the bandsaw be connected to a three-pole 16-amp breaker with class C tripping characteristic (16/3/C). Pressing the Start/Stop button turns the motor on and off.

7. Testing the bandsaw

1. Close the doors.
2. Check that the red safety switch is in the fully out position.
3. Check that the machine is clear of all tools and other loose objects.
4. Check that all the adjusting and locking handles are tight.
5. Check that there is no blade fitted; it is far safer to test the machine without a blade fitted.
6. Connect the bandsaw to the electricity supply.
7. Start the bandsaw by pressing the green start button.
8. The lower flywheel is now turning.
9. Now is the time to check that the stop switch is functioning correctly.
10. With the machine running (no blade fitted), operate the red stop switch by pressing toward the machine. The motor should have the power turned off and slow down.
11. If the switches fail to operate correctly, do not use the machine until the fault has been corrected.
12. With the motor running, press the red emergency stop button. The motor should have the power turned off and slow down.
13. With the motor running, press the foot break pedal. The motor should have the power removed and come to a stop.

Should the bandsaw fail the test, it must not be used until the fault has been corrected.



7.1 Before starting the bandsaw
Read and understand the instruction manual before operating the saw.
1. If you are still not thoroughly familiar with the operation of the bandsaw, get advice from a qualified person.
2. Make sure the machine is properly grounded and that the wiring codes are followed.
3. Do not operate the bandsaw while under the influence of drugs, alcohol or medicine or if tired.
4. Always wear eye protection, safety glasses or a safety shield, and hearing protection.
5. Wear a dust mask; long-term exposure to the fine dust created by the bandsaw is not healthy.
6. Remove your tie, rings, watch and all jewelry. Roll up your sleeves; you do not want anything to get caught in the saw.
7. Make sure that the guards are in place and use them at all times. The guards protect you from coming in contact with the blade.
8. Make sure that the saw blade teeth point downward toward the table.
9. Adjust the upper blade guard so that it is just clearing the material being cut.
10. Make sure that the blade has been properly tensioned and tracked.
11. Stop the machine before removing the scrap piece from the table.
12. Always keep your hands and fingers away from the blade.
13. Make sure that you use the proper size and type of blade.
14. Hold the work piece firmly against the table. Do not attempt to saw stock that does not have a flat surface facing down, unless a suitable support is used.
15. Use a push stick at the end of a cut. This is the most dangerous time because the cut is complete and the blade is exposed. Push sticks are commercially available.
16. Hold the wood firmly and feed it into the blade at a moderate speed.
17. Turn off the machine if you have to back the material out of an uncompleted or jammed cut.

7.2 Fitting a blade to the bandsaw
A lot of people do not like to change the blades and go to great lengths to avoid doing it. To use the bandsaw to its greatest advantage, you will have to use the appropriate blade and track it quickly. This is a habit that can be easily developed. If you use a step-by-step method of tracking and tensioning, the procedure should only take a minute or two. Be careful when using blades, especially wide ones. Always use gloves and safety glasses.

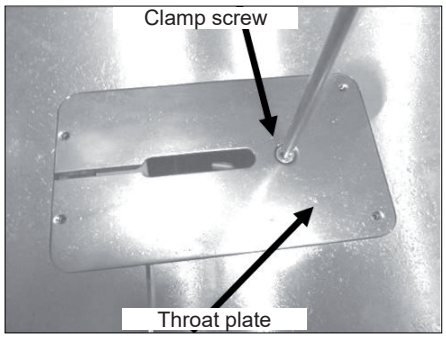

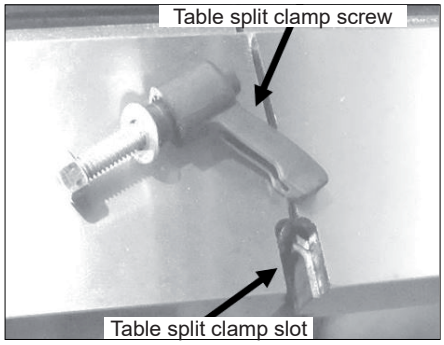

Disconnect the power from the bandsaw
1. Remove the throat plate by removing the clamp screw.
2. Remove the table split clamp ratchet handle.
3. Remove the plastic blanking plate.
4. Adjust the side guide and back guide out as far as they will go (both upper and lower guides). This will ensure that they do not interfere with the blade while you are fitting, tracking and tensioning the blade.
5. Uncoil the blade. Remember to use gloves and safety glasses. The blade may have dirt or oil on it, so use a clean rag to clean the blade by pulling rearwards so that the cloth does not hook on the teeth
6. Inspect the teeth and the general condition of the blade. If the teeth are pointing in the wrong direction when you hold the blade up to the machine, you will have to turn it inside out. To do this, hold the blade with both hands and rotate.
7. Slide the blade through the table split.
8. Open the blade guard door. Slide the blade over the top flywheel and feed through the slot at the side of the vertical column. Then feed the blade into the blade guard slot and close the blade guard door.
9. Deactivate the quick action blade tension lever and rotate the blade tension wheel so that the blade can fit over the lower flywheel.
10. Activate the quick action blade tension lever.
11. Apply light tension to the blade with the blade tension wheel.

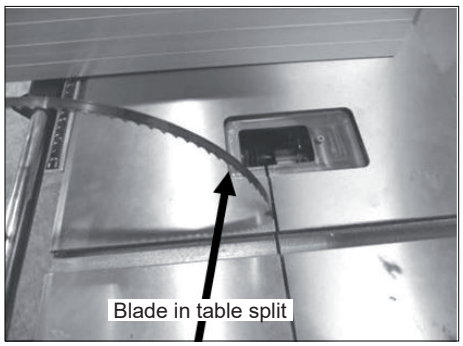

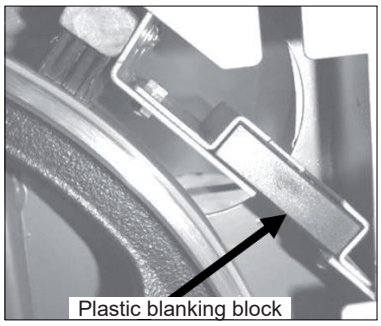

7.3 Tracking the blade

Tracking position of the blade on the wheels
There are different opinions on the position that the blade should be on the wheels. One group of people recommends that with large blades you should track the blade so that the teeth hang just over the front edge of the rubber. The second group recommends that all blades, regardless of their size, should run in the center of the wheel. The advantage of running the large blades with the teeth not contacting the rubber of the wheel is that they cannot damage the tire. The disadvantage is that the wheel is crowned and the blade is not tensioned in the center of the band, which gives the blade a tendency to wobble or flutter. The advantage of running large blades on the center of the wheels is that they are tensioned in the center of the band and have fewer tendencies to wobble and flutter. The disadvantage is that blades with a large set on the teeth have a tendency to damage the rubber of the tire. This does not have a great effect on the performance of the bandsaw, as all blades are running on the center section of the tire, which is not affected. We recommend that you balance all blades on the center of the wheels for optimum performance and a smoother cut.
1. To track the blade, start rotating the wheels by hand in the normal direction. As you do this, watch the blade to determine where the blade wants to track. If the blade is tracking too far forward or backward, make small adjustments with the tracking adjustment knob located at the back of the bandsaw while still rotating the wheel. Once the blade is tracking in the correct position, fully tension the blade and re-track. Lock the tracking adjustment handle.

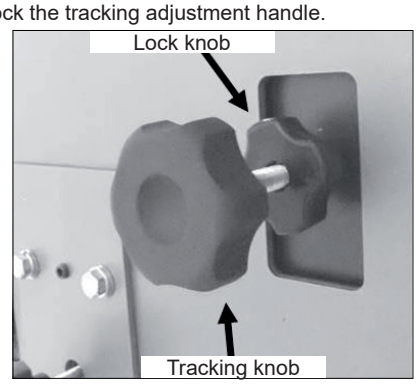

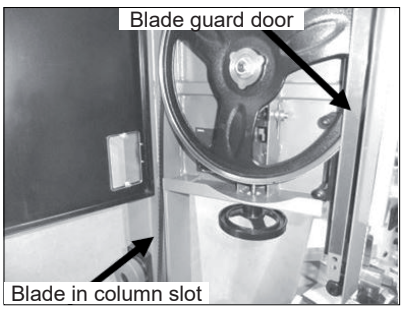

Note. Tensioning the blade is covered later in the manual.
2. Refit the plastic blanking block.
Note: The blade must be fully tensioned for final tracking.
Note: Never track the blade with the saw running.
Note. There is a window on the side of the bandsaw that
allows the blade on the upper flywheel to be viewed. This will
assist you while you are tracking the blade.

7.4 Tensioning the blade

There are a lot of opinions on how to tension a blade and if you should buy a blade tension gauge. Before you purchase a blade tension gauge, note the following points:
Most blade tension gauges are fitted to the blade and measure the amount the blade stretches when you tension it. Each blade manufacturer uses a different type of steel with different tensile strength. This means that each type of steel has a different rate of stretch. For example, if you buy a tension gauge from one blade manufacturer, it is designed for use on their blades, or range of blades, and will not necessarily give you accurate readings in lbs/ square inch on another manufacturer's blades because their blades stretch at a different rate. In reality, there is nothing quite as quick or as accurate as experience. Your machine is fitted with a blade tension indicator, which measures the deflection of the tension spring on the upper flywheel. We recommend that you use it only as a general guide and use one of the following tensioning procedures to tension the blade.



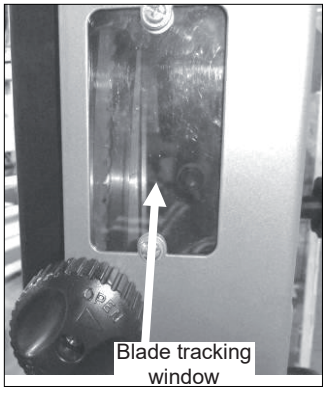

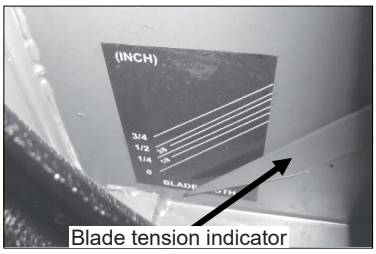

Method 1
Looking at the top wheel, place your finger at the 9 o'clock position. Move your finger down 15cm, and, using moderate pressure with your thumb, press on the flat of the blade. You should get 4 to 6 of deflection. Refit all the guards and close the doors. Replace the table insert and check that the blade moves freely through the table insert. Check that all wrenches and loose parts are removed from the machine.
Plug the machine into the power. Turn the machine on for a second and switch off. Watch how the blade runs. If the blade tracks well, then run the machine at full power. If the

Method 2
Tension the blade as described in method 1. Close all the doors and ensure that all the guards are fitted.
Start the band saw and look at the blade from the front of the machine. Start to detension the blade very slowly until the blade starts to flutter (wobble from side to side). Then start to tension the blade until the blade stops fluttering and is running true. Increase the tension on the blade by one complete turn on the tension handle. You may find that each size and type of blade will need more or less additional tension. For example, a 1,5mm blade will need less additional tension than a 19mm blade. Again, experience is the key, and with a little practice it will become second nature. The key to all tensioning is to get the blade to cut straight and true with the minimum amount of tension. The less tension that you put on the blade, the longer the blade and the machine will last.
Note. The upper flywheel has a spring that is used to keep a constant pressure on the blade during use. As the blade cuts, heat is generated, which causes the blade length to expand. The spring compensates for the change in length, and you must never bottom out the spring while tensioning the blade.
Note. If you are not using the bandsaw for extended periods of time (overnight), remove the tension on the blade. This will increase the life of your blade and the machine. If tension is left on the machine, flats or grooves can be formed in the rubber of the wheels, which will detract from the performance of the machine and in extreme cases cause vibration. Removing the
tension will greatly enhance the life of the machine, bearings and tires. Label the machine "detensioned." On the label, mark the number of turns that you detensioned; this way you will know how many turns that you have to put back on to have your blade correctly tensioned.

Removing the blade from the bandsaw
1. Disconnect the power to the bandsaw.
2. Remove the table split clamp that aligns the two table halves.
3. Remove all the guards.
4. Remove the table insert.
5. Remove the tension on the upper flywheel.
6. Open the doors and remove the blade from the wheels (use gloves and eye protection) and gently slide the blade through the table slot.

7.5 Adjusting the blade guards
Welcome to a new era in bandsawing. You have purchased a bandsaw with a revolutionary blade guide system that is designed to give you years of safe, high-quality bandsawing. Most blade guides are designed to support the blade on the sides and either above or below the side guides at the back of the blade. This can allow the blade to twist as pressure from the wood being cut pushes against the back blade guide. The Laguna Guide eliminates this by supporting the blade above and below the back blade guide, giving the blade unsurpassed stability. The Laguna Guide also incorporates patented ceramic as the blade support material. The advantage of this material is its ability to resist wear, and with care it should give years of safe service.

Please read the following notes as they will assist you in getting the optimum performance from your Laguna guide system.

As with the roller guide systems, the Laguna guide system will damage your blade if it is not adjusted correctly. The guide blocks must not come in contact with the teeth of the blade. It is advisable to run the blade by hand with the guide blocks completely clear of the blade, and only when you are completely sure that the blade is running consistently in the correct position, you may then adjust the surround guide blocks as detailed in this manual.

Note on using the Laguna ceramic guide system.
1. When fitting a blade to your bandsaw, adjust the guide blocks as detailed later and run the blade by hand through the guide blocks for at least two complete revolutions.
2. The weld on a new blade may not be perfectly aligned, and the misalignment could hit the ceramic blocks (side and back), causing damage to the blocks or the blade. If the blade has a bad weld, return it to your blade supplier or side dress and file the back of the blade as needed.
3. The back blade guide is manufactured from ceramic, so as the blade pushes against it, friction between the blade and the ceramic occurs. This action generates a certain amount of sparks. This is normal and will become less with time as the back of the blade guide smoothes out the back of the blade.
4. The back blade guide will slowly form a small grove as the blade is used (this is normal). It is recommended that for approximately every 8 hours of use, the guide be rotated 15 degrees. This will ensure that the groove does not become too deep and will greatly extend the life of your guide.
5. The Laguna guide system can be used with 1/8" to 1-1/4"blades.
6. The Laguna guide system uses ceramic to support and guide the blade. This has many advantages (very poor conductor of heat, very resistant to wear, etc.). The disadvantage is that it is very brittle, so the guides must never be dropped, exposed to hard knocks, hit with hard objects or used with badly welded blades. Any of the above actions may cause the ceramic to chip or break and will detract from the performance of the Laguna guide system. Any mistreatment of the guide system will render the warranty void.
7. The side guide blocks must be tightened before running the machine to avoid jamming the blade and damaging the machine and/or guide blocks.
8. When cutting gummy or green wood, the blade can become covered with resin. You will find that the surround guide system ceramic blocks remove the resin as the blade is moved through the guide blocks and keep that part of the blade clean. For this reason it is recommended that the blocks be adjusted as close to the gullet as possible, but the teeth must not come in contact with the blocks, as they will become damaged. Although the guide blocks clean the blade, some woods will still gum the blade and the resin will have to be removed with solvent.

7.6 Adjusting the blade guides
The blade should run through the center of the rear blade guide, and the side guides should be parallel with the blade. If they have been moved out of adjustment, adjust as follows:

Top Upper Side Guides Parallel Adjustment.
Loosen the side guides and move out as far as possible. Loosen the guide assembly and move back away from the blade. Move the back blade guide forward so it just touches the back of the blade and lock in position.
Loosen the guide clamp screw that allows the side guides to move forward and back. Adjust so that the ceramic blocks are just behind the gullet of the teeth and are parallel to the blade. Retighten the clamp screws. Gently push one side guide so that it touches the blade and lock it in position. Bring the other guide toward the blade so that there is minimal clearance between the blade and the guide. You can put a thin piece of paper to put between the blade and the guide to obtain the correct clearance until you gain experience. Tighten the clamp screws and remove the paper. Rotate the blade by hand, ensuring that the weld of the blade does not hit the ceramic blocks, as this will cause damage. If the blade has a bad weld, dress the blade or return it to your supplier.
Rotate the blade by hand and check that the back of the blade does not hit the blade guide with a bad weld. If the back of the blade hits the back blade guide at the weld, then dress the blade or, in excessive cases, return the blade to the supplier.

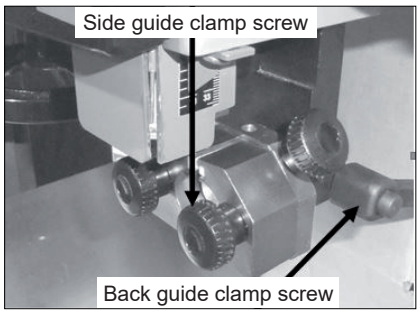

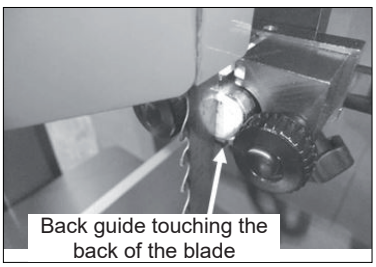

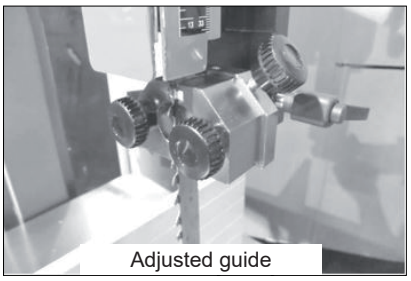

Lower blade guide.
The lower blade guides have two locking screws that, when released, allow the guide assembly to be moved forward and back. Rotate the blade by hand and ensure that it is tracking consistently in the correct position. Loosen the side guides and move out from the blade. Loosen the two clamp screws that allow the guide assembly to move forward and back. Adjust it so that the ceramic blocks are just behind the gullet of the blade and retighten the clamp screws.
Place a dollar bill or piece of paper of similar thickness between the guide blocks and the blade. Gently bring both side guides toward the blade so that slight pressure is exerted on the blade. Tighten the clamp screws and remove the paper. Rotate the blade by hand, ensuring that the weld of the blade does not hit the ceramic blocks, as this will cause damage. If the blade has a bad weld, dress the blade or return it to your supplier.
Loosen the rear guide clamp screw and push the guide forward so that it just touches the back of the blade.
Tighten the guide in position.
Rotate the blade by hand and check to see that the back of the blade does not hit the blade guide with a bad weld. If the back of the blade hits the rear blade guide at the weld, then dress the blade or, in excessive cases, return the blade to the supplier.

Note: You will probably find that the guides can be adjusted more easily by tilting the table to 45 degrees.
Note: Rotate the back guide by approximately 15 degrees after every 8 hours of use. This will greatly extend the life of the back blade guide, as it will even out the wear.

Before you cut any wood, read the safety rules at the front of this manual.

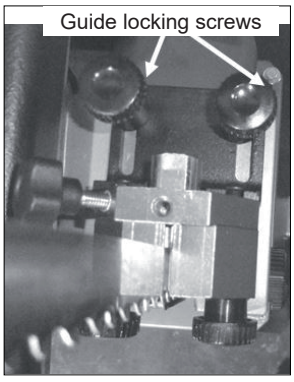

Lower blade guide shown with the table removed for clarity

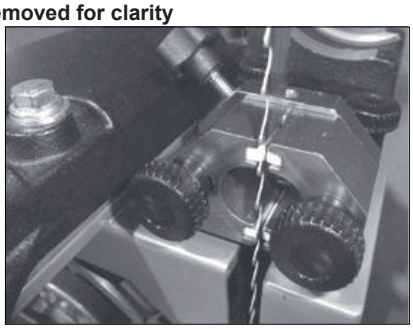

Side guides adjusted with ceramic just behind the gullet



8. Using the bandsaw

8.1 Adjusting the fence

Although the bandsaw is usually associated with cutting curves, a variety of straight cuts are easily made with the saw. In fact, it is often used to rip wood because it is much safer than a radial arm saw and also has a smaller saw cut, so it wastes less wood. This becomes very important when using expensive wood where waste must be kept to a minimum. The cut is safer because the force of the cut is straight down on the table; the work cannot be pulled back or kicked back, which sometimes happens with table or radial arm saws. The bandsaw can also cut very thick stock, which the radial arm, or table saw cannot do. The disadvantage of cutting with the bandsaw is that the surface finish of the cut is not as good as with the table or radial arm saw. This can be overcome to a great degree by using the Resaw king blade from Laguna. The blade has many of advantages such as superior surface finish to the cut, thin kerf (low wood waste), it can be re-sharpened, will cut hard woods and has a long life.

Ripping

Ripping is a cut made with the grain of the wood. The four most common cuts made with the grain of the wood are rip, bevel, taper and resaw cuts. There are two frequently used techniques for making straight bandsaw cuts. One technique is to use a single point to guide the work. The rationale for using a single point is that the saw may tend to cut at a slight angle. This is called drift or lead. The single point allows the operator to compensate for the drift and cut the wood straight. With a little practice, you will obtain satisfactory results using this method. However, you now own a real bandsaw, so this method is not recommended. Another method is to use the rip fence as a guide. Once set up, this takes the guesswork out of cutting, reduces the stress on the operator and is a must for volume work. Once you have mastered the setup procedure, you will tend to use the single point method less and less.

Adjusting the fence for drift
Method 1

1. Make a straight pencil line on the edge of a board.
2. Feed the wood into the blade cutting next to the pencil mark. If the blade is drifting, you will have to compensate by angling the wood to keep the cut straight.
3. Stop the cut in the middle of the wood and mark (with pencil) the angle on the table. This is the angle of drift, and you will have to set the fence to the pencil line.
4. To adjust the fence, loosen the clamp bolts that attach it to the cast bracket. Move the fence so that it lines up with the pencil mark on the table and retighten the clamp screws.

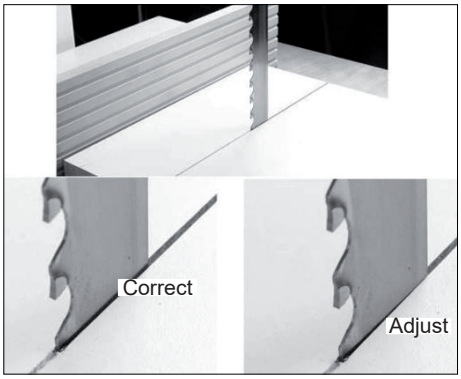

Method 2

1. Set the fence parallel with the blade by loosening the clamp screws that hold it to the cast bracket. It is not important that it is exact because you will be readjusting later in the procedure.
2. Using a piece of scrap wood, make a cut while holding the wood against the fence. Stop the cut in the middle of the wood.
3. Look at the position of the back of the blade within the saw cut. The back of the blade should be in the center of the slot, but you will probably find that it is closer to one side.
4. Slightly loosen the clamp screws and adjust the fence to compensate. Repeat steps 2, 3 and 4 until the blade is centered.

Note: You may have to do several fine adjustments, and it is better to do several small adjustments until you become skilled at the procedure. Once you have mastered the process, it should only take a minute to perform the adjustment.

Note: Each blade has a slightly different drift, and each time you change a blade, you must check and readjust if necessary.

Note: It is worth taking the time to set the fence accurately as it will save frustration and enhance the performance of your machine.

Adjusting the table rule

There is a rule that is fitted to the side of the table and can be used as a quick guide on the distance that the fence is from the blade.

Note. The rule will have to be adjusted each time the fence is adjusted for drift, as this will change the distance the fence is from the blade. Once the fence has been adjusted for drift:

1. Lock the fence to the rail.
2. Measure the distance from the front of the blade to the fence.
3. Check the distance indicated on the rule.
4. Loosen the clamp bolts and adjust the rule.
5. Tighten the clamp bolts and recheck.

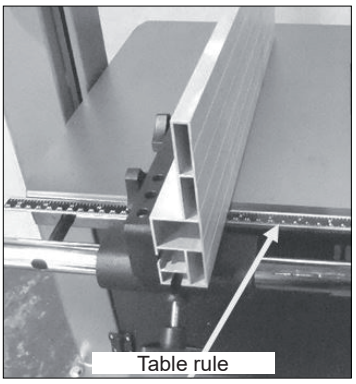

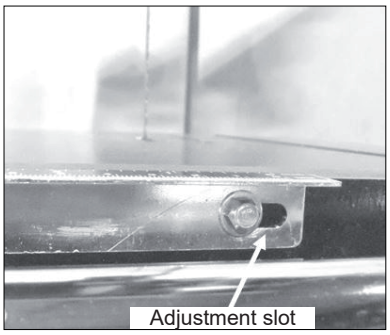

Fence position
Fence in low position

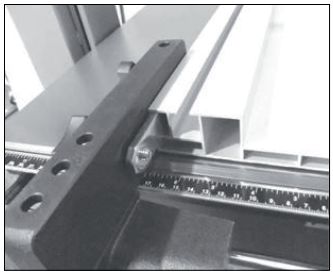

Fence in high position

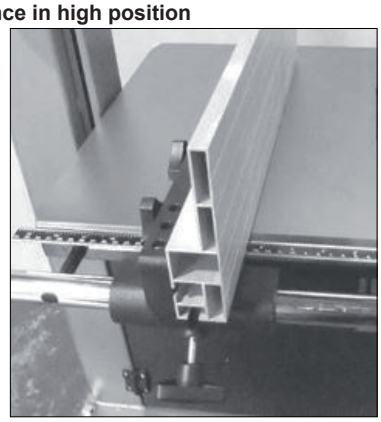

The aluminum fence can be used in two height positions (high and low). The low position is handy for cutting thin wood and is used where the fence in the high position would make it awkward to complete cuts. The fence in the high position is used for supporting tall work.

Changing the fence height.

1. Loosen the clamp screws that are located on the cast bracket.
2. Slide the aluminum fence off the cast iron bracket.
3. Slide the aluminum fence back onto the bracket using the second slot and retighten the clamp screws.

Resawing.
Resawing is the process of cutting a board in half along its height. The bandsaw is perhaps the most creative tool in the shop because of its ability to cut thick or thin, straight or curved. The ability to cut thick stock such as re-sawing, making veneers, book matching or cutting flitches from small logs has great appeal to the woodworker. These capabilities greatly enhance he woodworker's design ability without the need for additional equipment. When a board is resawed and the two pieces are lying next to each other, you will note that they are mirror images of each other. When these two boards are glued together, it is called bookmatching.
Note: It is unsafe to cut wood that is unsupported by the table and should never be attempted. This is especially important to note when cutting round logs.

8.2 Selecting the Right Blade

Introduction
The selection and use of blades is a very extensive subject, and there have been many books written on it. This section of the manual is intended as a general guide only.

Selecting a blade
Using the correct blade is important, as it is the first step in attaining good bandsaw performance. The most frequently asked question is „How do I decide on the correct blade to use?" The answer is not simple, and we will explore it in this section of the manual. Firstly, there is **NO** ideal blade that will do everything. The blades that you choose will be determined by the type of work that you are doing. Large-tooth wide blades are selected for fast course cuts, and fine, thin blades are used for intricate scrollwork. You will find that you will need a large selection of blades if you do a lot of varied work and fewer blades if you are concentrating on one section of bandsawing such as re-sawing. Using the wrong blade is the best way to abuse it. Using a blade for its intended purpose allows for maximum efficiency and is the best way to prolong its life.

Blade terms
The amount that the teeth are wider than the thickness of the backing material. The larger the set, the larger the saw cut and the smaller the radius that can be cut. This can also be an advantage if you are cutting a job that has a tendency to nip the blade. The smaller the set, the smaller the saw cut and the larger the radius that can be cut; the wood waste is less. On tipped blades (Resaw King) there is no set, as the tip is wider than the backing material.

Thickness
The thicker the blade, the stiffer the blade and the straighter the cut. The thicker the band, the greater the tendency for the blade to break.

Pitch
The size of the teeth. This is usually quoted in teeth per inch (TPI). The larger the tooth, the faster the cut because the tooth has a large gullet and has a greater capacity to transport large amounts of sawdust through the job. The larger the tooth, the coarser the cut and the poorer the surface finish of the cut. The smaller the tooth, the slower the cut as the tooth has a small gullet and cannot transport large amounts of sawdust through the job. The smaller the tooth, the finer the cut and the better the surface finish of the cut

Material Hardness.
When choosing the blade with the proper pitch, one factor you should consider is the hardness of the material that is being cut: the harder the material, the finer the pitch that is required. For example, exotic hardwoods such as ebony and rosewood require blades with a finer pitch than American hardwoods such as oak or maple. Soft wood such as pine will quickly clog the blade, decreasing its ability to cut. Having a variety of tooth configurations in the same width will most likely give you an acceptable choice for a particular job. There are certain things that indicate if a blade has a proper pitch, too fine a pitch or too coarse a pitch.

Some are listed below:

Proper Pitch
Blades cut quickly.
A minimum amount of heat is created when the blade cuts.
Minimum feeding pressure is required.
Minimum horsepower is required.
The blade makes quality cuts for a long period.

Pitch Is Too Fine
The blade cuts slowly.
There is excessive heat, which causes premature breakage or rapid dulling.
Unnecessarily high feeding pressure is required.
Unnecessarily high horsepower is required.
The blade wears excessively.

Pitch Is Too Coarse
The blade has a short cutting life.
The teeth wear excessively.
The bandsaw vibrates.

Width
The dimension from the back of the blade to the front of the teeth. The wider the blade, the stiffer the blade and the straighter the cut. This is usually called beam strength. But wide blades cannot cut small radiuses.
The narrower the blade, the more flexible the blade and the greater the tendency the blade has to wander. These have low-beam strength, but can cut small radiuses. Blades are available from 3mm up for your machine.

Kerf
The width of the saw cut. The larger the kerf, the smaller the radius that can be cut, the greater the amount of wood the blade has to be removed by the blade and the greater the horse power that is needed because the blade is doing more work. The greater the kerf, the larger the amount of wood that is being wasted by the cut.

Hook or Rake
The cutting angle or shape of the tooth. The greater the angle, the more aggressive the tooth and the faster the cut. But the faster the cut, the faster the tooth will blunt, and the poorer will be the surface finish the cut will have. Aggressive blades are suitable for soft woods but will not last when cutting hard woods. The smaller the angle, the less aggressive the tooth, the slower the cut and the harder must be the wood that the blade is suitable to cut. Hook teeth have a progressive cutting angle and take the form of a progressive radius. They are used for fast cutting where finish is not important. Rake teeth have a flat cutting angle and are used for a fine surface finish of the cut.

Gullet
The area in which the sawdust has to be transported through the wood, the larger the tooth (pitch) the bigger the gullet is.

Relief
The angle from the tip of the tooth back. The greater the angle, the more aggressive the tooth but the weaker the tooth.

Beam Strength
This is the ability of the blade to resist bending backwards. The wider the blade, the stronger the beam strength; therefore, a 25mm blade has far greater beam strength than a 3mm blade and will cut straighter and is more suitable for resawing.

Blade Selection
As you have seen from the previous section, there are a great number of variables. The blade selection that you will make will greatly depend on the type of work that you intend to do with your machine. If you have experience with the bandsaw, you will probably have a good idea of the blades that are suitable for you. If you lack the experience or are unsure of the type of work you will be doing with your machine, we recommend that you purchase a selection similar to that listed below, which is a good general selection and will allow you to tackle most jobs. As you gain experience, you will settle on the blades that suit you.

1. 6 mm x 6 TPI. This is a small, aggressive blade that is suitable for tight curves and fast cutting where a good surface finish of the cut is not important.
2. 6 mm x 14 TPI. This is a small, fine blade suitable for reasonably tight cuts where the surface finish is important but speed of cut is less important.
3. 13 mm x 3 TPI. This is a general-purpose blade that can cut large radiuses and short sections of straight cuts. The cut is fast but the surface finish of the cut is poor.
4. 19 mm x 3 TPI. This is a general-purpose blade, which will be used for straight cuts and is suitable for large radiuses.
5. 25 mm x 2 TPI. This is a resaw blade, which will be used for straight cuts and is suitable for processing veneers.

Rounding the back of the blade
With most guide systems it is recommended that the back of the blade be rounded with a stone. As the machine is supplied with Laguna ceramic guides, this is not imperative because the ceramic will round the back of the blade as it is used. However, if you decide that you want to round the back of the blade, a procedure follows.
A round blade back creates smooth interaction between the thrust bearing and the blade. If the blade rotates slightly, there is no sharp blade corner to dig into the thrust bearing; also, the rounding process smoothes the weld. A blade with a round back makes tight turns better because the round back has smooth interaction with saw kerfs.
After the guides have been adjusted and the machine is running, hold the stone against the back corner of the blade for about a minute. Wear safety glasses when rounding the blade. Then, do the same thing on the opposite corner. Next, slowly move the stone to round the back. The more pressure you put on the back, the faster you will remove the metal. Be careful that the inside of the machine is free of sawdust because sparks could start a fire. On small blades such as a 1/4" blade, the pressure on the back of the blade may bring the blade

forward off the front of the wheels. Therefore, be careful not to put too much pressure on the stone. When doing this, it is also important that the upper guides be positioned right above the stone.
The blade has teeth and extreme caution must be exercised, as your hands will be very close to them.

Causes of blade breakage
1. Excessive blade thickness in relation to the flywheel diameter.
2. Defective welding.
3. Incorrect tension, particularly if the blade is over tensioned; the tension spring no longer fulfils its function.
4. After use it is recommended that you slacken the tension, especially overnight. (Be sure to place a clearly visible note on the machine that you have done this.
5. Misalignment of the flywheels.
6. Irregularity of flywheel surface, for instance, an accumulation of sawdust while cutting resinous materials.
You can correct these problems by readjusting the machine, changing the way you operate it or by changing the blade. Try only one change at a time.

Causes of blade dulling.
1. Poorly set side guides or rear thrust guide.
2. Poor tracking.
3. Wrong blade selection. If the blade is too narrow, it will flex more easily and decrease the quality of the cut. The blade should also have the correct pitch and width.
4. The tooth pitch is too fine (too many teeth per inch).
5. Certain woods will dull a steel blade very quickly, especially tropical hardwoods (teak, koa, etc.). Other woods with a high silicon content will also dull the blade quickly; even a cut as short as 152,4mm will cause damage to the blade.
6. On certain exotic woods, the ends have been painted. This is done to control the drying. The paint is very abrasive and will dull the blade as you cut through it. It is recommended that you cut the painted ends off your wood.

Using a radius chart.
Until you become well acquainted with your saw, it is best to use the contour (radius) chart to determine which size blade to use for a specific application. Radius charts can be found in many woodworking books, magazine articles and on blade boxes. They differ slightly from one another but are good as rough indicators of how tightly a curve can be cut with a particular blade. Each blade saw and operator is different, so it is impossible to make a truly accurate chart. A blade can cut continuously without backtracking any curve that has a radius as much as or more than is shown on the chart. For example: a 3/16“ blade will cut a circle with a 5/16“ radius or a 5/8“ diameter. To test if a 3/16“ blade would work for a particular curve, place a dime (roughly 5/8“) over the pattern. The 3/16“ blade can cut a curve bigger than the dime, but not smaller. You can use everyday items such as coins or a pencil to determine which blade to use. A quarter is the size of the tightest cut that can be made with a 1/4“ blade. A dime is the size of the tightest curve that can be cut with a 3/16“ blade. A pencil eraser is the size of the tightest turn that you can make with a 1/8“ blade. After a while you won‘t even need an object to size the possible curve of a blade because you will have become familiar with this process. There are options to matching the blade to the smallest curve pattern. If there is only one very tight cut, it may be best to use a turning hole, a relief cut, successive passes or to change the blade. If you have a lot of cutting to do, you can use a wider blade for the bigger curves and then switch to a narrower blade for the tighter curves. Changing the blades can often save cutting and finish time. The chart above is only a rough guide and is **not to scale**, but from the information you can construct your own guide.

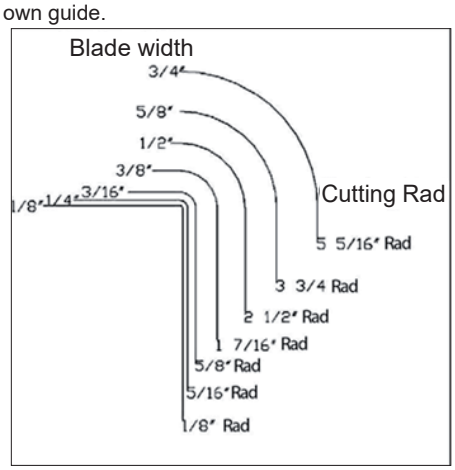

8.3 How to coil a bandsaw blade
Without a doubt it is more difficult to explain how to coil a bandsaw blade than it is to actually do it. Nevertheless, below are easy-to-follow instructions on folding a blade.

Method 1

While wearing a jacket or long-sleeved shirt and gloves, hold the blade in front of you in one large loop, with the teeth facing towards you. Place your foot on the blade, holding it on the ground. Grasp the blade with both hands, with your thumbs to the outside, at approximately the 10 o‘clock and 2 o‘clock positions (Step 1). Slowly twist the top of the blade away from your body (Step 2). Bring your hands together to form two loops while folding down (Step 3). Continue rotating the blade until you form three loops.
Note. It is recommended that the blade be placed on material that will not damage the blade teeth (wood or cardboard). Your foot is there to give stability and not to clamp the blade, so do not exert excessive force, or the teeth/band may be damaged. The photographs are shown without gloves to enable the hand/thumb position to be shown. Gloves must be worn, as the blade could cause injury.

Step 1



Step 2



Step 3



Done



Note: In order to show the hand/thumb position of the man in the photographs, he is not wearing gloves, but gloves MUST BE WORN as the blade could cause injury.

Method 2

There is another variation of this that works well with small blades but simply is not possible for larger bandsaw blades, unless you‘re very big and strong. This method works the same as the method above, but rather than holding the blade with both hands, grasp the blade at the top while holding the bottom of the blade with your foot (teeth still facing away from you). Grasp the blade with your hand, twisting your arm such that your elbow is facing away from your body (Step 1). Turn the palm of your hand toward your body about 180 degrees and then continue turning while pushing down on the blade (Steps 2, 3 and 4). The blade will fold down upon itself into three circles, lying flat on the ground (Done).

Step 1



Step 2



Step 3



Step 4

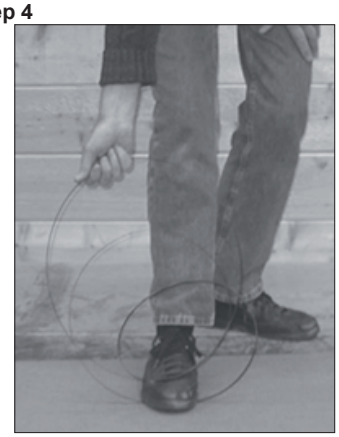

Done



Method 3

The steering wheel method. Start with the blade in front of you, as if you're holding a steering wheel with your hands at the 9 o'clock and 3 o'clock positions. Simultaneously twist your left hand up and your right hand down. As the blade starts to fold, move your hands closer together while tilting your left hand to the right and your right hand to the left. The blade will fall into three coils. A variation of this method is to hold the blade as above, but twist both hands inward, so you're looking at your knuckles and the blade will again fall into three coils.

Step 1



Step 2

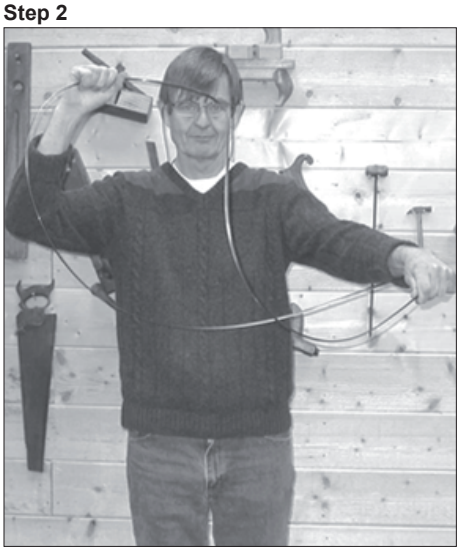

Step 3



Step 4



Done



9. Maintenance

All tools and machines require regular maintenance, and the bandsaw is no exception. This section details the general maintenance and care of your bandsaw. In general, we recommend that you only use a Teflon-based lubricant on the bandsaw. While regular oil attracts dust and dirt, Teflon tends to dry and has fewer tendencies to accumulate dirt and sawdust on your machine.

Cleanliness and tire maintenance.
One of the major concerns in regards to the maintenance of the bandsaw is how clean the tires are. As the saw cuts, some sawdust lands on the tire of the lower wheel. As the wheel rotates, the sawdust becomes compressed on the tire. This is especially true for woods such as pine. The compressed sawdust could have a negative effect, such as vibration, short blade life and drifting of the blade. A brush contacts the lower wheel and helps to prevent buildup. You should inspect the tires regularly to check that buildup is not happening, especially the lower wheel. The tires are made of rubber and wear just like car tires. They wear in the middle, which causes a concavity in the tire. The deformation makes it hard to track the blades, and for this reason it is important to maintain the original shape of the tire. The best way to clean the tire surface and maintain the original shape is to sand it with sandpaper. The old tire surface often hardens and glazes over and should be redressed occasionally. This can be done by sanding the wheel with 100-grit sandpaper. This will take off a little of the rubber and expose new rubber, which is desirable. Rotate the wheels by hand with the blade removed.

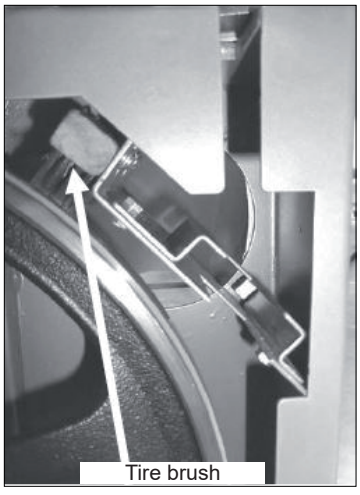

Guides
The ceramic side and back guides should be inspected regularly for cracks and chips. If they are damaged, they should be replaced as they could damage your blades and bad guides will detract from the performance of the bandsaw. The guides should be cleaned regularly and any wood gum or dirt removed. Any commercially available solvent can be used, and after cleaning they should be lubricated with Teflon-based lubricant.

Drive Belt
The drive belt should last for many years (depending on the usage) but needs to be inspected regularly for cracks, cuts and general wear. If damage is found, replace the belt.

Replacing the drive belt

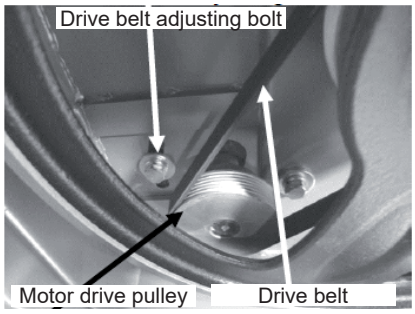

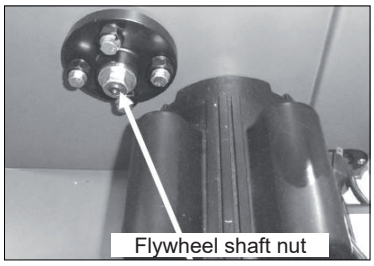

To replace the belts you will have to remove the lower flywheel.
1. Loosen the motor clamp bolts and move the motor so that the tension is completely removed from the drive belt. Remove the blade. Loosen the two hex nuts that hold the brake to the bandsaw frame and slide it out of the way of the disc.
2. Remove the flywheel shaft nut that clamps the wheel axle (back of the bandsaw).
3. Pull the lower flywheel off the bandsaw. You may have to use a gear puller to remove the lower wheel.
4. Replace the drive belt.
5. Refit the lower wheel and re-clamp with the flywheel shaft nut.
6. Tension the drive belt and tighten the motor clamping bolts.
Note. It is better to replace the drive belt early than to have a breakdown during an important job.
Note. Take great care not to damage the bearings when taking the flywheel off and reassembling.

Table Insert.
The table insert (throat plate) is made of aluminium and is designed to reduce damage to the blade should they come in contact. If the blade slot becomes too wide or the insert becomes damaged by the blade, it should be replaced. The replacement insert will have to be fitted to the table hole. The insert is provided with four jacking screws that can be adjusted so that the insert is level with the top of the table.

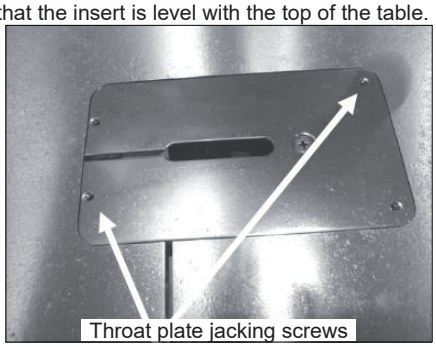

Bearings
All bearings are sealed for life and do not require any maintenance. If a bearing becomes faulty, replace it.

Rust
The bandsaw is made from steel and cast iron. All non-painted surfaces will rust if not protected. It is recommended that the table be protected by coating with wax if the machine is not in constant use. All moving non-painted surfaces (guides, rack and pinion, etc.) should be lubricated/protected with a Teflon-based lubricant.

Blade guide rack and pinion
The top guide when moved vertically tracks the blade and comes factory-set. Adjustment is provided should that mechanism become misaligned. This is a tricky operation and should only be attempted if an extreme error has occurred.

Back guide forward/back adjustment.
1. Four clamping bolts and two Allen jacking screws are provided.
2. Slightly loosen the two clamping bolts A and tighten the bottom Allen screw B will bring the guide forward.
3. Slightly loosen the two clamping bolts C and tighten the top Allen screw D will bring the guide back.
4. Make only very small adjustments. Tighten the clamping bolts prior to checking the guide vertical movement.
Note: The machine comes factory-set, and no adjustment should be required.

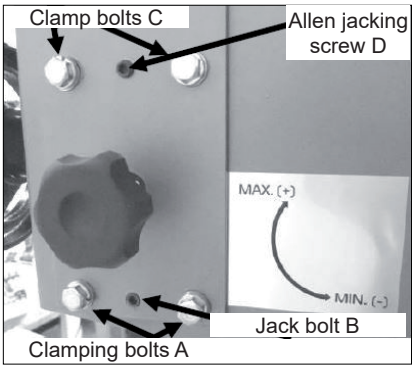

Adjusting the break
Back break adjustor

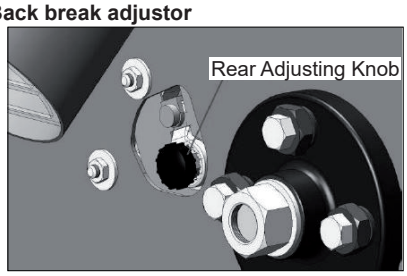

Front break adjustor
Flywheel not shown for clarity

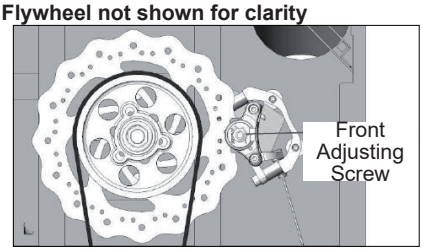

The back break adjustor moves clockwise to remove slack in the break pad.
The front break adjustor is rotated clockwise with an allen key to remove slack in the break pad.

Adjusting the table square to the bandsaw blade

Note. The machine is set in the factory and no adjustment should be required but during transportation movement may occur.

To access the adjustment screws, you will have to tilt the table up to 45 degrees and lock in position.

The adjustment is made with the jacking screws 1 & 3 only. Jack screw 5 and clamp screws 6 are used for support only.

1. Set the table to 90 degrees and place an engineer's square on the table and check if the blade is leaning forward or backward. The blade will be parallel and it is easier to check the blade at the back.

2. Tilt the table up to 45 degrees and lock in position.

3. Loosen jack screw 5 and clamp screws 6 [only used for support and not adjustment].

4. If the top of the blade is leaning forward [gap at the top of the engineers square], the back of the table will have to be adjusted up. Slightly loosen set screw 3 and the two hex head screws 2, when loosening the clamp hex head screws ensure that they are loosened the same amount. Then fully tighten set screw 1 and the two hex head screws 4. Only make very small adjustments as a small movement of the jack screws makes a large adjustment of the table. Move the table back to 90 degrees, clamp in position and check if the blade is square to the table with the engineers square. Repeat adjustment if required.

5. If the top of the blade is leaning back [gap at the bottom of the engineers square], the front of the table will have to be adjusted up. Slightly loosen set screw 3 and the two hex head screws 2. Then fully tighten set screw 1 and the two hex head screws 4. Only make very small adjustments as a small movement of the jack screws makes a large adjustment of the table. Move the table back to 90 degrees, clamp in position and check if the blade is square to the table with the engineers square. Repeat adjustment if required

6. Once adjustments have been completed, lightly tighten set screw 5 and the two clamp hex head screws 6. Do not over tighten as this will bend the steel support plate and may affect the adjustment that you have made.

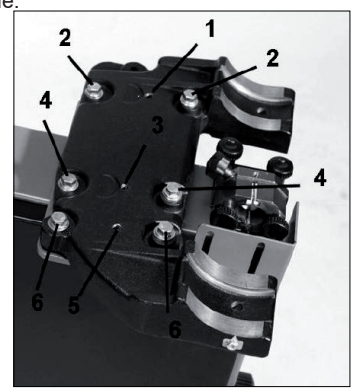

Adjusting the table square to blade.

1. Check that the stop bolt is in contact with the tilt-blanking disc.
2. Place an engineers square on the table top and bring up to the side of the blade.
3. Check if the blade is square to the table.
4. If adjustment is required loosen the lock nut on the tilt-stop bolt and adjust in the required direction.

Note. Only adjust the tilt-stop bolt in very small steps.

5. Tighten the lock nut and recheck the blade square to the table.
6. If additional adjustment is required repeat above steps.

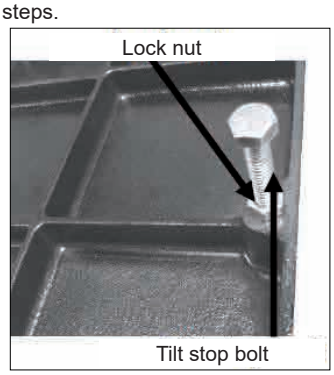

10. Troubleshooting

Bandsaw will not start.

1. Check that the start switch is fully pulled out.
2. Check that the yellow safety plug is fully engaged.
3. Check that the electrical power cord is plugged into the power outlet.
4. Check that the electrical supply is on (reset the breaker).
5. Check that you have the correct power.

The machine will not stop.

This is a very rare occurrence, as the machine is designed to be fail-safe. If it should occur and you cannot fix the fault, seek professional assistance. The machine must be disconnected from the power and never run until the fault has been rectified.

1. Stop switch faulty. Replace the stop switch.
2. Internal breaker faulty. Replace the breaker.

Motor tries to start but will not turn.

1. With the power disconnected from the machine, open the doors and try to turn the wheel by hand. If the wheel is not turning, check the reason for the jamming. Typical reasons are: guides too tight, wood jammed in the wheel. Adjust guides or remove jammed wood.
2. Capacitor faulty. Replace the capacitor.
3. Motor faulty. Replace the motor.

Motor overheats.

The motor is designed to run very hot, but should it overheat it has an internal terminal overload protector that will shut it down until the motor has cooled down and then it will reset automatically. If the motor overheats, wait until it has cooled down and restart. If the motor shuts down constantly, check for the reason. Typical reasons are dull blade, overfeeding the wood, motor cooling fan clogged or faulty, motor cooling fins clogged and excessive ambient temperature.

Squeaking noise.

1. Check that the motor cooling fan is not contacting the fan cover.
2. Check the bearings.
3. Check the drive belt.
4. Check that the guides are adjusted correctly.

Upper guide shaft is tight or loose.

1. Clean and lubricate.
2. Adjust rack and pinion.
3. Bent rack. Replace the rack.

Blade slows down during a cut.

1. Loose drive belt. Re-tension the belt.
2. Dull blade. Replace the blade or have it re-sharpened.
3. Feeding the wood too fast. Slow down the feed rate.
4. Insufficient set on the teeth (wood nipping the blade). Change blade for a blade with the correct set.
5. Oil or dirt on the drive belt. Clean or replace the drive belts.
6. Fence not aligned correctly. Align fence.

Blade will not track on flywheels.

1. Bad blade. Change the blade.
2. Crown on the wheels worn or damaged tire. Dress the tires.

The blade kicks.

Bad blade. Replace the blade.

The blade makes a clicking noise.

Bad weld. Dress the weld or change the blade.

Blade overheats.

1. Dull blade. Change the blade or resharpen the blade.
2. Pitch is too small for the depth of cut. Change to a blade with the correct pitch.
3. Guides too tight. Adjust the guides.
4. Wood too hard for the selected blade. Change the blade.
5. Blade too thick for the diameter of the wheels. Change the blade.

Machine vibrates.

1. Machine not level on the floor. Re-level the machine ensuring that it has no movement.
2. Damaged drive belt. Replace the belt.

11. Wiring diagram

	colour of strands
BK	black
WH	white
BU	blue
YE	yellow
RD	red
BN	brown
GNYE	green-yellow

	meaning of symbol
M	motor
S	switch
C	condenser
LS	limit switch
OL	overload cut-off
BR	motor break
R	rectifier
CS	centrifugal switch
KM1	contactor for main motor
E	emergency stop

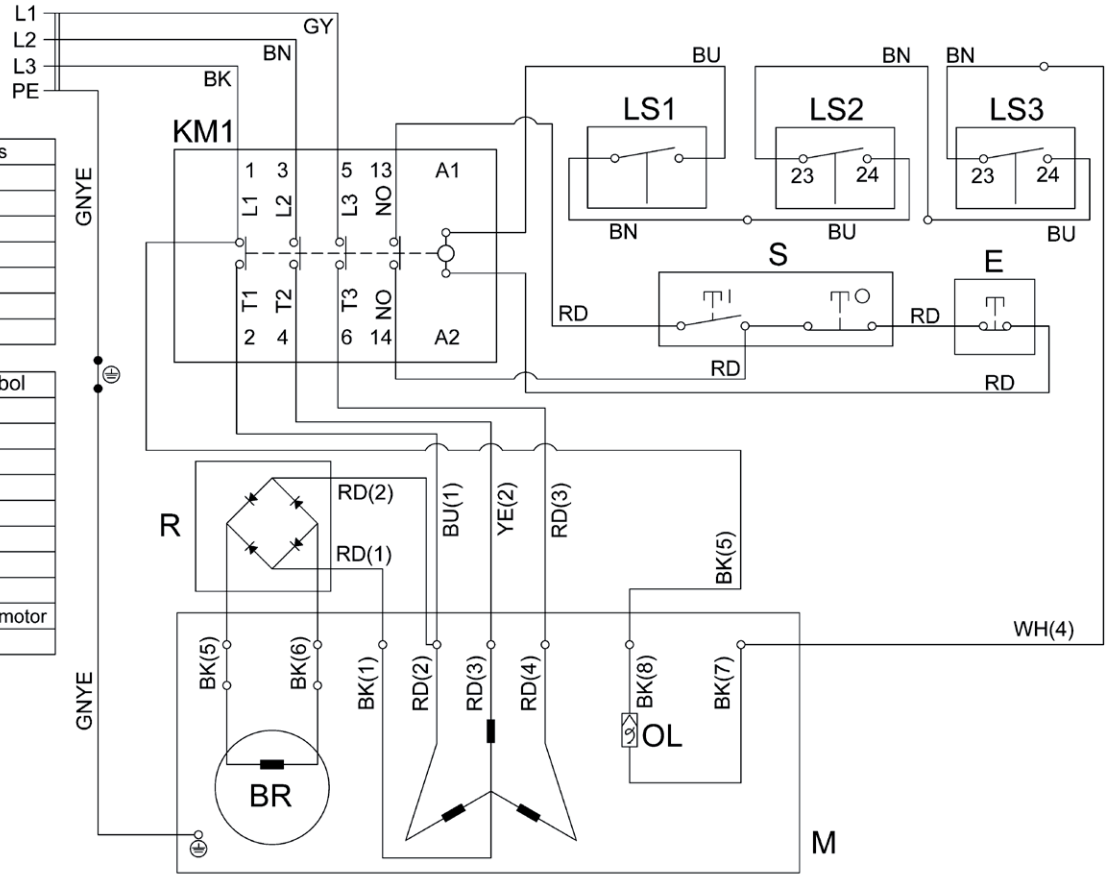

12. Exploded view drawing/parts
Upper Wheel Assembly

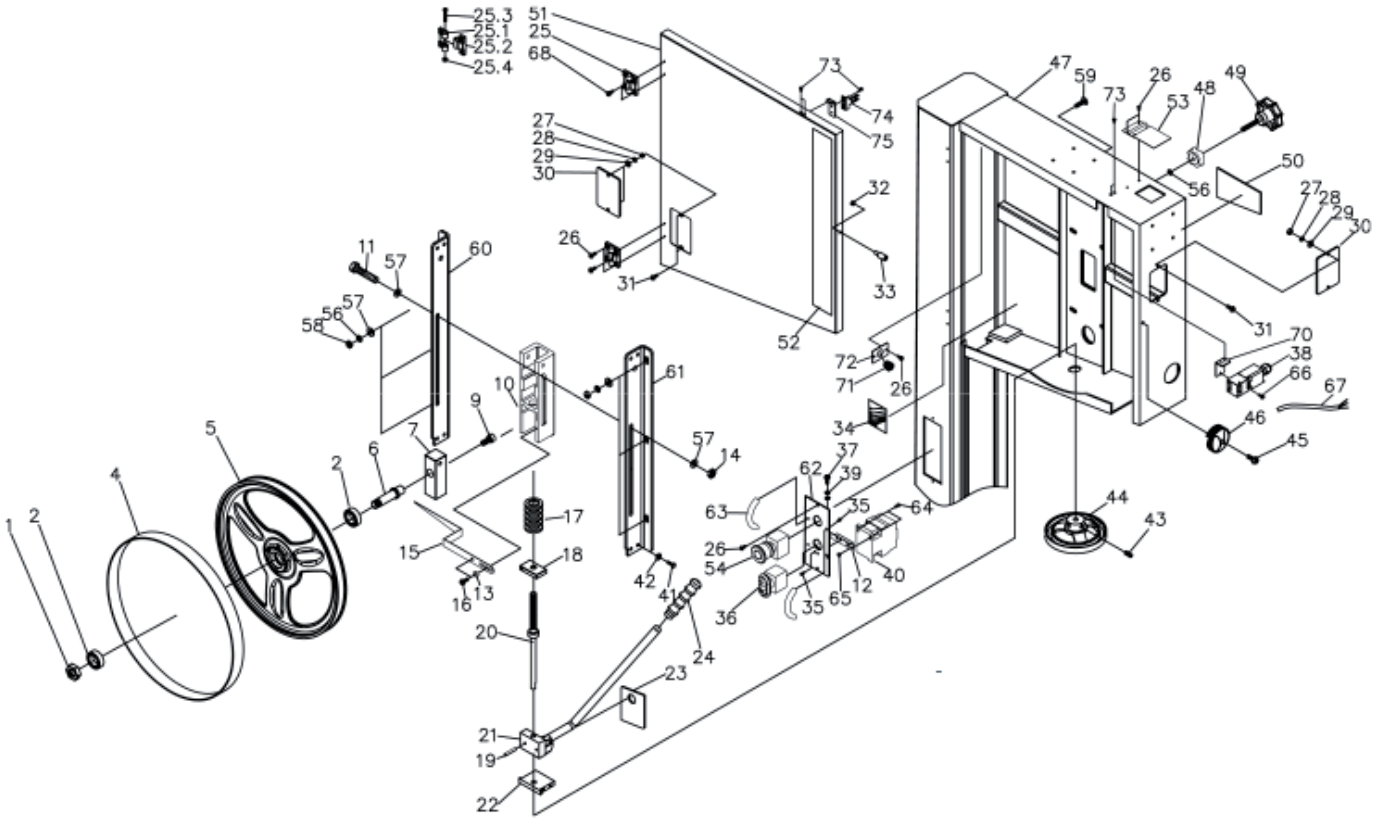

#	PART NO	DESCRIPTION	SPECIFICATION	QTY
	Upper Wheel Assembly			
1	PBAND18BX2203-1	Hex Nut	5/8-18UNF-LH	1
2	PBAND18BX2203-2	Ball Bearing	6204LLU	2
3	PBAND18BX2203-4	PU Tire		1
4	PBAND18BX2203-5	Upper Wheel		1
5	PBAND18BX2203-6	Upper Wheel Shaft		1
6	PBAND18BX2203-7	Upper Wheel Shaft Bracket		1
7	PBAND1412-175-9	Socket Head Cap Screw	3/8-16UNCx5/8"	1
8	PBAND18BX2203-10	Sliding Bracket		1
9	PBAND18BX2203-11	Hex Cap Screw	M8x1.25X80mm	1
10	PBAND1412-175-170	Switch Plate		1
11	PBAND18BX2203-13	Bushing		1
12	PBAND18BX2203-14	Nylon Inserted Lock Nut	M8x1.25	1
13	PBAND18BX2203-15	Pointer		1
14	PBAND18BX2203-16	Special Bolt		2
15	PBAND18BX2203-17	Spring		1
16	PBAND18BX2203-18	Bracket		1
17	PBAND1412-175-19	Pin	Ø4x20mm	1
18	PBAND18BX2203-20	Adjusting Screw		1
19	PBAND18BX2203-21	Blade Tension Arm Assembly		1
20	PBAND18BX2203-22	Support Block		1
21	PBAND1412-175-23	Plate		1
22	PBAND1412-175-24	Handle		1
23	PBAND1412-175-25	Door Hinge Set		2
24	PBAND1412-175-25-1	Door Hinge, Left		2
25	PBAND1412-175-25-2	Door Hinge, Right		2
26	PBAND1412-175-25-3	Socket Head Cap Screw	M5x0.8x35mm	2
27	PBAND1412-175-25-4	Nylon Inserted Lock Nut	M5x0.8	2
28	PBAND1412-175-26	Screw	M3.5x0.6x10mm	10
29	PBAND1412-175-27	Hex Nut	#10-24UNC	4
30	PBAND1412-175-28	Lock Washer	#10	4
31	PBAND1412-175-29	Flat Washer	#10	4
32	PBAND1412-175-30	Tracking Window		2
33	PBAND1412-175-31	Screw	#10-24UNCx1/2"	4
34	PBAND1412-175-32	Hex Nut	1/4-20UNC	1
35	PBAND1412-175-33	Door Stud		1
36	PBAND18BX2203-34	Tension Gauge		1
37	MBAN-D14BX110-175-35	Phillips Flat Head Screw	M3x0.5x6mm	6
38	MBAN-D14BX110-175-36	ON/ OFF Switch		1
39	PBAND1412-175-37	Screw	M5x0.8x16mm	2
40	PBAND1412-175-2-62	Safety Interlock Switch	QKS8	1
41	PBAND1412-175-39	Washer, Lock-Int. Tooth	M5	3
42	MBAN-D14BX220-250-40	Contactor	1PH, 230V	1
43	PBAND18BX-2203-40-UK1	Contactor	3PH, 400V	1
44	PBAND1412-175-41	Hex Cap Screw	1/4-20UNCx5/8"	4
45	PBAND1412-175-42	Lock Washer	1/4"	4
46	PBAND1412-175-43	Set Screw	1/4-20UNCx3/8"	2

#	PART NO	DESCRIPTION	SPECIFICATION	QTY
47	PBAND18BX2203-44	Hand wheel		1
48	PBAND1412-175-45	Screw	1/4-20UNCx3/4"	1
49	PBAND1412-175-46	Lock Knob		1
50	PBAND18BX-2203-47-UK	Saw Body		1
51	PBAND1412-175-48	Lock Knob		1
52	PBAND1412-175-49	Adjusting Knob		1
53	PBAND1412-175-50	Tension Label		1
54	PBAND18BX-2203-51-UK	Upper Door		1
55	PBAND18BX2203-52	Logo Label		1
56	PBAND1412-175-53	Hinge Cover		1
57	MBAN-D14BX110-175-54	Emergency Stop		1
58	PBAND1412-175-55	Warning Label(not shown)		1
59	PBAND1412-175-2-13	Lock Washer	5/16"	7
60	PBAND1412-175-2-11	Flat Washer	5/16"	8
61	PBAND1412-175-3-38	Hex Nut	5/16-18UNC	6
62	PBAND18BX2203-59	Carriage Bolt	5/16-18UNCx1"	6
63	PBAND18BX-2203-60-UK	Upper Wheel Bracket- Left		1
64	PBAND18BX-2203-61-UK	Upper Wheel Bracket-Right		1
65	PBAND18BX2203-62	Control Panel		1
66	MBAN-D14BX110-175-63	Handle		2
67	MBAN-D14BX110-175-64	Hex Cap Screw	M4x0.7x12mm	2
68	MBAN-D14BX110-175-65	Hex Nut	M4x0.7	2
69	PBAND1412-175-2-61	Screw	M4x0.7x30mm	2
70	PBAND1412-175-2-57	Safety Interlock Switch Cord		1
71	MBAN-D14BX110-175-68	Screw	M4x0.7x8mm	4
72	PBAND18BX-2203-70-UK	Safety Interlock Switch Support Bracket		1
73	PBAND1412-175-2-56	Strain Relief	PG-9	1
74	PBAND1412-175-2-54	Plate		1
75	PBAND1412-175-2-58	Screw	M4x0.7x6mm	6
76	PBAND1412-175-2-60	Safety Interlock Switch Pin		1
77	PBAND18BX-2203-75-UK	"SafetyInterlock Switch Pin Support Bracket"		1
78	MBAND14BX220-250-72-UK	"Connectors for Junction Boxes (not shown)"		3

Lower Wheel and Motor Assembly

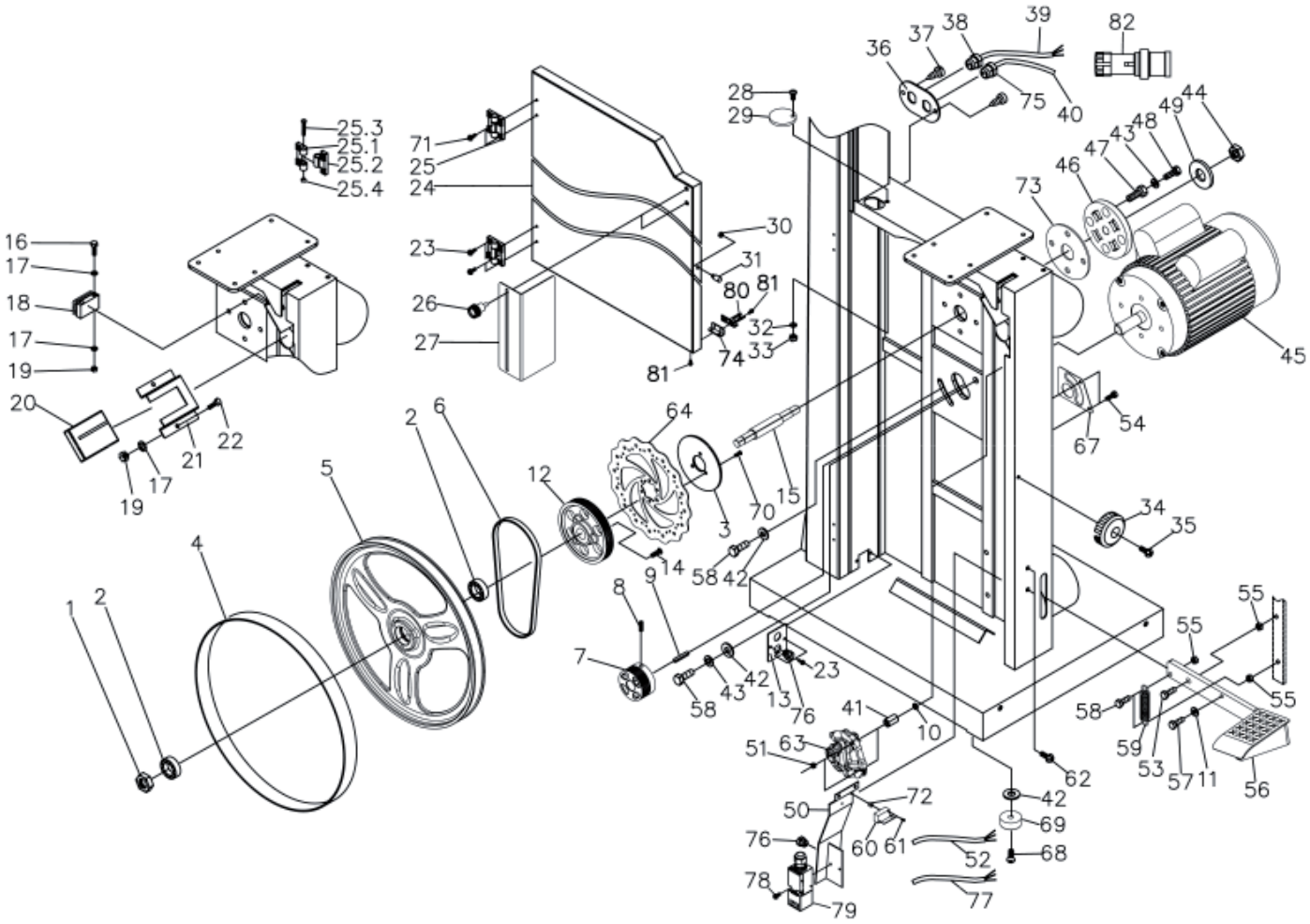

#	PART NO	DESCRIPTION	SPECIFICATION	QTY
	Lower Wheel and Motor Assembly			
1	PBAND18BX2203-1	Hex Nut	5/8-18UNF-LH	1
2	PBAND18BX2203-2	Ball Bearing	6204LLU	2
3	PBAND18BX2203-2-3	Plate		1
4	PBAND18BX2203-4	PU Tire		1
5	PBAND18BX2203-2-5	Lower Wheel		1
6	PBAND18BX2203-2-6	Poly-V Belt		1
7	PBAND18BX2203-2-7	Motor Pulley		1
8	PBAND1412-175-2-8	Set Screw	5/16-18UNCx3/8"	2
9	PBAND1412-175-2-9	Key	6x6x40mm	1
10	MBAN-D14BX110-175-2-10	Flat Washer	1/4"	2
11	PBAND1412-175-2-11	Flat Washer	5/16"	2
12	PBAND18BX2203-2-12	Spindle Pulley		1
13	MBAND14BX220-250-213-UK	Plate		1
14	MBAN-D14BX110-175-2-14	Phillips Flat Head Screw	5/16-18UNCx1-1/2"	3
15	PBAND18BX2203-2-15	Lower Spindle		1
16	PBAND1412-175-2-16	Hex Cap Screw	M5x0.8x30mm	2
17	PBAND1412-175-2-17	Flat Washer	#10	6
18	PBAND1412-175-2-18	Brush		1
19	PBAND1412-175-2-19	Hex Nut	M5x0.8	4
20	PBAND1412-175-2-20	Insert Block		1
21	PBAND1412-175-2-21	Shelf		1
22	PBAND1412-175-2-22	Hex Cap Screw	M5x0.8x8mm	2
23	PBAND1412-175-2-23	Screw	M3.5x0.6x10mm	6
24	PBAND18BX2203-2-24-UK	Lower Door		1
25	PBAND1412-175-25	Door Hinge Set		2
26	PBAND1412-175-25-1	Door Hinge, Left		2
27	PBAND1412-175-25-2	Door Hinge, Right		2
28	PBAND1412-175-25-3	Socket Head Cap Screw	M5x0.8x35mm	2
29	PBAND1412-175-25-4	Nylon Inserted Lock Nut	M5x0.8	2
30	PBAND1412-175-2-26	Lock Knob		2
31	PBAND18BX2203-2-27-UK	Lower Blade Guard		1
32	PBAND1412-175-2-28	Screw	1/4-20UNCx3/4"	1
33	PBAND1412-175-2-29	Plate		1
34	PBAND1412-175-2-30	Hex Nut	1/4-20UNC	1
35	PBAND1412-175-2-31	Door Stud		1
36	PBAND1412-175-2-32	Flat Washer	1/4"	1
37	PBAND1412-175-2-33	Nylon Inserted Lock Nut	1/4-20UNC	1
38	PBAND1412-175-2-34	Lock Knob		1
39	PBAND1412-175-2-35	Screw	1/4-20UNCx3/4"	1
40	PBAND1412-175-2-36-UK	Plate		1
41	PBAND1412-175-2-37	Screw	#10-24UNCx3/8"	2
42	PBAND1412-175-2-38-UK	Strain Relief	PG-13.5	2
43	PBAND18BX2203-2-39-UK	Motor Cord	1PH, 230V	1
44	PBAND18BX2203-2-39-UK1	Motor Cord	3PH, 400V	
45	PBAND18BX2203-2-40-UK	Power Cord	1PH, 230V	1
46	PBAND18BX2203-2-40-UK1	Power Cord	3PH, 400V	
47	MBAN-D14BX110-175-2-76	Spacer		2
48	PBAND1412-175-2-42	Flat Washer	3/8"	6
49	PBAND1412-175-2-43	Lock Washer	3/8"	5
50	PBAND18BX2203-2-44	Hex Nut	3/4-16UNF	1
51	PBAND18BX2203-2-45-UK	Motor	3HP, 1PH, 230V	1
52	PBAND18BX2203-2-45-UK1	Motor	3HP, 3PH, 400V	1
53	PBAND18BX-2203-2-45MF	Motor Fan (not shown)		1
54	PBAND18BX-2203-2-45MFC	Motor Fan Cover (not shown)		1
55	PBAND18BX-2203-2-45JB-UK	Junction Box (not shown)		1
56	14BX220-250-245JBC	Junction Box Cover (not shown)		1
57	PBAND18BX-2203-2-45MB	Motor Break (not shown)		1
58	PBAND18BX-2203-2-45RR	Rectifier (not shown)		1
59	PBAND1412-175-2-46	Spindle Holder		1
60	PBAND1412-175-2-47	Adjusting Screw		4
61	PBAND1412-175-2-48	Hex Cap Screw	3/8-16UNCx1-3/4"	4
62	PBAND18BX2203-2-49	Flat Washer	3/4"	1
63	PBAND18BX2203-2-50-UK	Switch Cover		1
64	MBAN-D14BX110-175-2-51	Hex Nut	M6x1.0	2
65	MBAN-D14BX110-175-2-52-UK	Limited Switch Cord		1
66	MBAN-D14BX110-175-2-53	Hex Cap Screw	3/8-16UNCx3/4"	1
67	MBAN-D14BX110-175-2-54	Hex Cap Screw	M6x1.0x35mm	2
68	PBAND1412-175-3-36	Hex Nut	3/8-16UNC	3
69	PBAND18BX2203-2-56	Foot Brake		1
70	MBAN-D14BX110-175-2-57	Socket Head Cap Screw	5/16-18UNCx1/2"	1
71	MBAN-D14BX110-175-2-58	Hex Cap Screw	3/8-16UNCx1-1/4"	4
72	MBAN-D14BX110-175-2-59	Spring		1
73	MBAN-D14BX110-175-2-60	Limited Switch		1
74	MBAN-D14BX110-175-2-61	Screw	M3x0.5x20mm	2
75	MBAN-D14BX110-175-2-62	Screw	1/4-20UNCx3/8"	2
76	MBAN-D14BX110-175-2-63	Brake Assembly		1
77	MBAND14BX110-175-2-63P	Brake Pad (not shown), 2 pieces		
78	MBAN-D14BX110-175-2-64	Disc		1
79	MBAN-D14BX110-175-2-65	Inner Cable(not shown)		1
80	MBAN-D14BX110-175-2-66	Housing(not shown)		1
81	MBAN-D14BX110-175-2-67	Plate		1
82	MBAN-D14BX110-175-2-68	Socket Head Button Screw	3/8-16UNCx1"	4
83	MBAN-D14BX110-175-2-69	Rubber Pad		4
84	MBAN-D14BX110-175-2-70	Socket Head Button Screw	M5x0.8x12mm	3
85	MBAN-D14BX110-175-68	Screw	M4x0.7x8mm	4
86	MBAN-D14BX110-175-2-72	Spacer		2
87	MBAN-D14BX110-175-2-73	Plate		1
88	MBAN-D14BX220-250-2-74-UK	Bracket-Safety Interlock Switch Pin		1
89	PBAND1412-175-2-50	Strain Relief	PG-11	1
90	PBAND1412-175-2-56	Strain Relief	PG-9	3
91	MBAN-D14BX220-250-2-79-UK	Safety Interlock Switch Cord		1
92	PBAND1412-175-2-61	Screw	M4x0.7x30mm	2
93	PBAND1412-175-2-62	Safety Interlock Switch	QKS8	1
94	PBAND1412-175-2-60	Safety Interlock Switch Pin		1
95	PBAND1412-175-2-58	Screw	M4x0.7x6mm	4
96	PBAND18BX2203-2-82-UK	Plug	1PH, 230V	1
97	PBAND18BX2203-2-82-UK1	Plug	3PH, 400V	2

Table and Fence Assembly

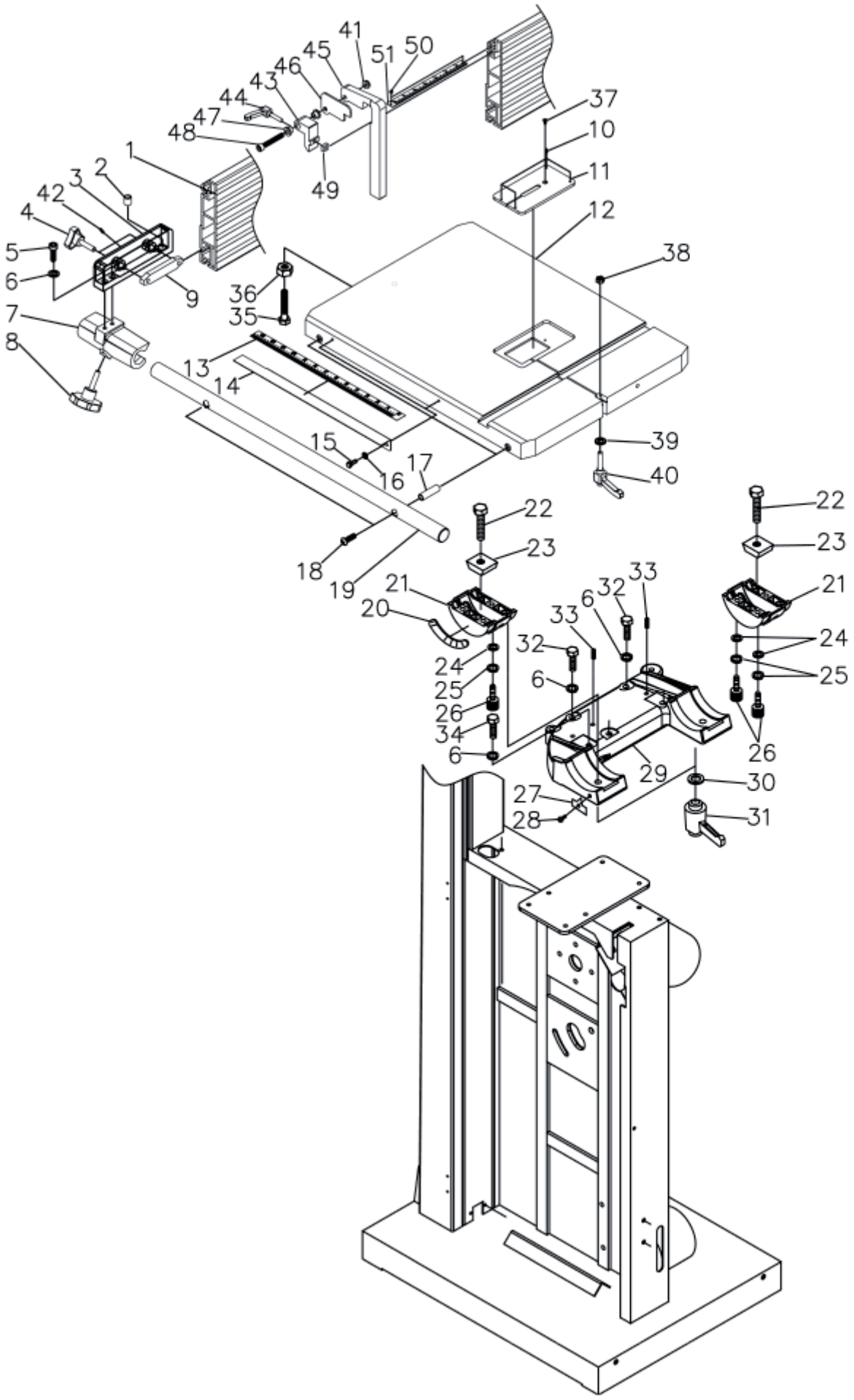

#	PART NO	DESCRIPTION	SPECIFICATION	QTY
	Table and Fence Assembly			
1	PBAND18BX2203-3-1	Aluminum Fence		1
2	PBAND1412-175-3-2	Plastic Adjusting Screw		1
3	PBAND1412-175-3-3	Fence Body		1
4	PBAND1412-175-3-4	Lock Knob		2
5	PBAND1412-175-3-5	Socket Head Cap Screw	5/16-18UNCx3/4"	3
6	PBAND1412-175-3-6	Lock Washer	5/16"	10
7	PBAND1412-175-3-7	Fence Head		1
8	PBAND18BX2203-3-8	Lock Knob		1
9	PBAND1412-175-3-9	Lock Bar		1
10	PBAND1412-175-3-10	Set Screw	M4x0.7x4mm	4
11	PBAND1412-175-3-11	Table Insert		1
12	PBAND18BX2203-3-12	Table		1
13	PBAND18BX2203-3-13	Scale		1
14	PBAND18BX2203-3-14	Scale Plate		1
15	PBAND1412-175-3-15	Hex Cap Screw	M5x0.8x10mm	2
16	PBAND1412-175-3-16	Flat Washer	#10	2
17	PBAND1412-175-3-17	Bushing		2
18	PBAND1412-175-3-18	Socket Head Cap Screw	5/16-18UNCx2"	2
19	PBAND18BX2203-3-19	Steel Bar		1
20	PBAND1412-175-3-20	Scale		1
21	PBAND1412-175-3-21	Trunnion		2
22	PBAND1412-175-3-22	Hex Cap Screw	M10x1.5x50mm	2
23	PBAND1412-175-3-23	Slide Block		2
24	PBAND1412-175-3-24	Flat Washer	1/4"	6
25	PBAND1412-175-3-25	Lock Washer	1/4"	6
26	PBAND1412-175-3-26	Socket Head Cap Screw	M6x1.0x16mm	6
27	PBAND1412-175-3-27	Pointer		1
28	PBAND1412-175-3-28	Screw	M5x0.8x8mm	1
29	PBAND1412-175-3-29	Bracket		1
30	PBAND1412-175-3-30	Flat Washer	3/8"	2
31	PBAND1412-175-3-31	Lock Handle		2
32	PBAND1412-175-3-32	Hex Cap Screw	5/16-18UNCx1-1/4"	3
33	PBAND1412-175-3-33	Set Screw	5/16-18UNCx5/8"	2
34	PBAND1412-175-3-34	Hex Cap Screw	5/16-18UNCx1-3/4"	3
35	PBAND1412-175-3-35	Hex Cap Screw	3/8-16UNCx2"	1
36	PBAND1412-175-3-36	Hex Nut	3/8-16UNC	1
37	PBAND1412-175-3-37	Phillips Flat Head Screw	M4x0.7x8mm	1
38	PBAND1412-175-3-38	Hex Nut	5/16-18UNC	1
39	PBAND1412-175-3-39	Flat Washer	5/16"	1
40	PBAND1412-175-3-40	Lock Handle		1
41	PBAND18BX2203-3-41	Nylon Inserted Lock Nut	5/16-18UNC	1
42	PBAND1412-175-3-42	Set Screw	1/4-20UNCx1/4"	2
43	PBAND18BX2203-3-43	Fence Stop Hinge		1
44	PBAND18BX2203-3-44	Lock Handle		1
45	PBAND18BX2203-3-45	Fence Stop-A		1
46	PBAND18BX2203-3-46	Fence Stop-B		1
47	PBAND1412-175-6-26	Bushing		2
48	PBAND18BX2203-3-48	Socket Head Cap Screw	5/16-18UNCx2"	1
49	PBAND18BX2203-3-49	Square Nut	1/4-20UNC	1
50	PBAND18BX2203-3-50	Screw	M3x0.5x4mm	2
51	PBAND18BX2203-3-51	Scale		1

Table and Lower Blade Guides Assembly

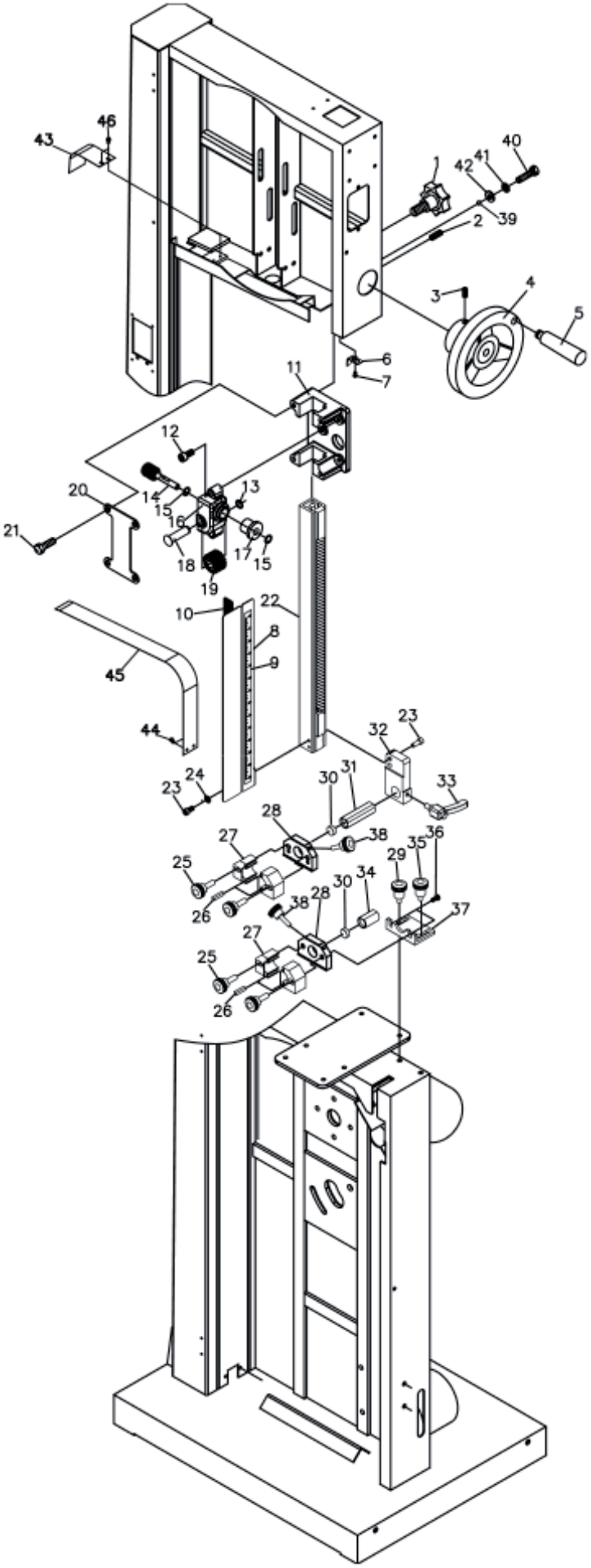

#	PART NO	DESCRIPTION	SPECIFICATION	QTY
	Upper and Lower Blade Guides Assembly			
1	PBAND1412-175-4-1	Lock Knob		1
2	PBAND1412-175-4-2	Set Screw	5/16-18UNCx3/8"	2
3	PBAND1412-175-4-3	Set Screw	1/4-20UNCx3/8"	1
4	PBAND1412-175-4-4	Hand wheel		1
5	PBAND1412-175-4-5	Handle		1
6	PBAND18BX2203-4-6	Pointer		1
7	PBAND1412-175-4-7	Screw	1/4-20UNCx3/8"	1
8	PBAND18BX2203-4-8-UK	Upper Blade Guard		1
9	PBAND18BX2203-4-9	Height Scale		1
10	PBAND18BX2203-4-10	Magnet		1
11	PBAND1412-175-4-11	Guide Bar Bracket		1
12	PBAND1412-175-4-12	Socket Head Cap Screw	5/16-18UNCx1-1/4"	2
13	PBAND1412-175-4-13	C-Ring	S12	1
14	PBAND1412-175-4-14	Worm		1
15	PBAND1412-175-4-15	E-Ring	E8	2
16	PBAND1412-175-4-16	Gear Base		1
17	PBAND1412-175-4-17	Bushing		1
18	PBAND1412-175-4-18-UK	Shaft		1
19	PBAND1412-175-4-19	Gear		1
20	PBAND1412-175-4-20	Plate		1
21	PBAND1412-175-4-21-UK	Special Screw		4

#	PART NO	DESCRIPTION	SPECIFICATION	QTY
22	PBAND18BX2203-4-22	Guide Bar		1
23	PBAND1412-175-4-23	Socket Head Cap Screw	1/4-20UNCx5/8"	4
24	PBAND1412-175-4-24	Lock Washer	1/4"	2
25	PBAND1412-175-4-25	Lock Knob		4
26	PBAND1412-175-4-26	Ceramic Guide		8
27	PBAND1412-175-4-27	Adjusting Block		4
28	PBAND1412-175-4-28	Fixed Block		2
29	PBAND1412-175-4-29	Lock Knob		1
30	PBAND1412-175-4-30	Ceramic Guide		2
31	PBAND1412-175-4-31	Support Shaft		1
32	PBAND1412-175-4-32	Guide Bracket		1
33	PBAND1412-175-4-33	Lock Handle		1
34	PBAND1412-175-4-34	Support Shaft		1
35	PBAND1412-175-4-35	Lock Knob		1
36	PBAND1412-175-4-36	Socket Head Button Screw	1/4-20UNCx1/2"	2
37	PBAND18BX2203-4-37	Base		1
38	PBAND1412-175-4-38	Special Bolt		2
39	PBAND1412-175-4-39	Steel Ball		1
40	PBAND1412-175-4-40	Hex Cap Screw	5/16-18UNCx1"	4
41	PBAND1412-175-4-41	Lock Washer	5/16"	4
42	PBAND1412-175-4-42	Flat Washer	5/16"	4
43	PBAND1412-175-4-43	Guide plate		1
44	PBAND1412-175-4-44	Special Bolt		2
45	PBAND18BX2203-4-45	Slide Guard		1
46	PBAND1412-175-4-46	Screw	M4x0.7x8mm	2

IGM nástroje a stroje s.r.o., Ke Kopanině 560,
Tuchoměřice, 252 67, Czech Republic, EU
+420 220 950 910, **www.igmtools.com**

© 2022 IGM nástroje a stroje s.r.o.